Rexroth
Bosch Group

Coils - Connectors

RE 18325-90/08.18
Replaces: RE 18325-90/02.18

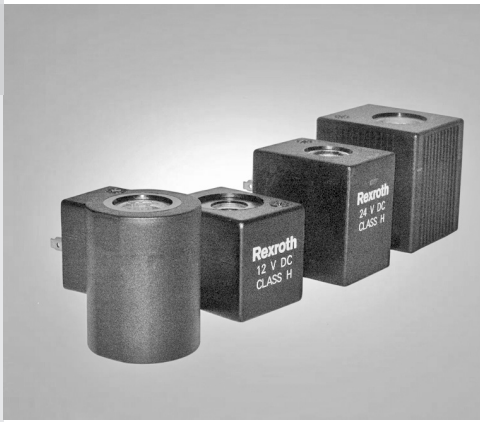

Coils
Connectors

Summary

Description	Page
Coils	
Coil S8-356 - CLASS H - 20 W	2-3
Coil S8-356 - CLASS H - 17 W	4
Coil S8-356 - G2 - CLASS H - 19.5 W	5
Coil S5 - CLASS H - 20 W	6
Coil S7 - CLASS H - 30 W	7
Coil S7 - CLASS H - 26 W	8
Coil C45 - CLASS H	9
Coil R7 - CLASS H - 18 W	10
Coil R7 - CLASS H - 28 W	11
Coil GZ37 - CLASS H - 22 W	12
Coil GP37 - CLASS H	13
Coil D36 - CLASS H - 20 W	14-15
Coil D36 - CLASS H- 20 W - UL RECOGNIZED	16

Description	Page
Connectors	
Connector IP67	17-20

Coils - Connectors

COIL S8-356 - CLASS H - 20 W OD.02.17 - X - Y - Z

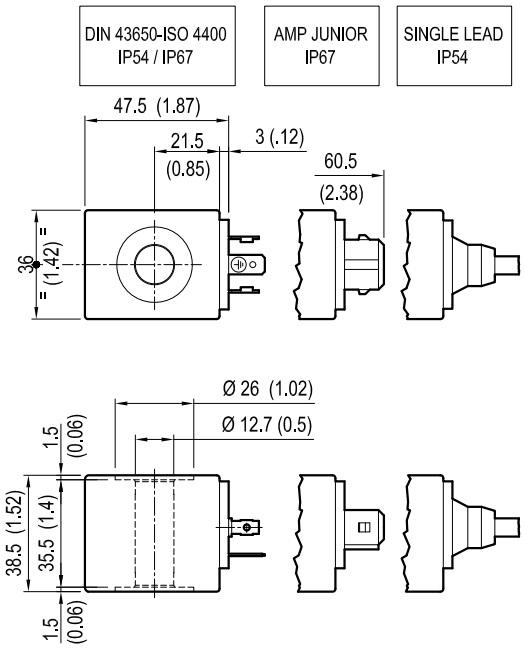

[mm / Inches]

TECHNICAL DATA
Weight: 0.18 kg (0.40 lbs)
Heat insulation Class H: 180°C (356°F)
Ambient temperature range: -30/+60°C (-22/+140°F)
Inlet voltage fluctuations must not exceed ±10% of nominal voltage to obtain correct operation and long life coils.

X	Y	Connections	Circuit	Voltage
01	30	DIN 43650 - ISO 4400	Standard	DC-RAC
07	30	AMP JUNIOR	Standard	DC
0G	03	SINGLE LEAD	Standard	DC *
14	30	DIN 43650 - ISO 4400	Bidirectionl Diode	DC
15	30	AMP JUNIOR	Bidirectional Diode	DC
0H	03	SINGLE LEAD	Bidirectional Diode	DC *

* Length 300mm (11.8 inches). Ext. diameter 6.3mm (0.25 inches). External and internal Shealth Silicone rubber.

Z	Voltage V	Resistance Ohm (±7%)	Power W	Current A		ΔT °C (°F)
	Nominal	Ta = 20-25°C (68-77°F)	Cold coil	Cold coil	Hot coil	1 hour energized at Ta=20-25°C (68-77°F) Nominal voltage
OB	12 DC	7.2	20	1.7	1.2	105-110 (221-230)
OG	14 DC	9.0	20	1.6	1.1	
OC	24 DC	28.2	20	0.9	0.6	
AC	26 DC	33.6	20	0.8	0.5	
AF	30 DC	44.1	20			
OV	24 RAC	23.1	20	0.9	-	110-125 (230-257)
OW	110 RAC	478.3	20	0.2	-	

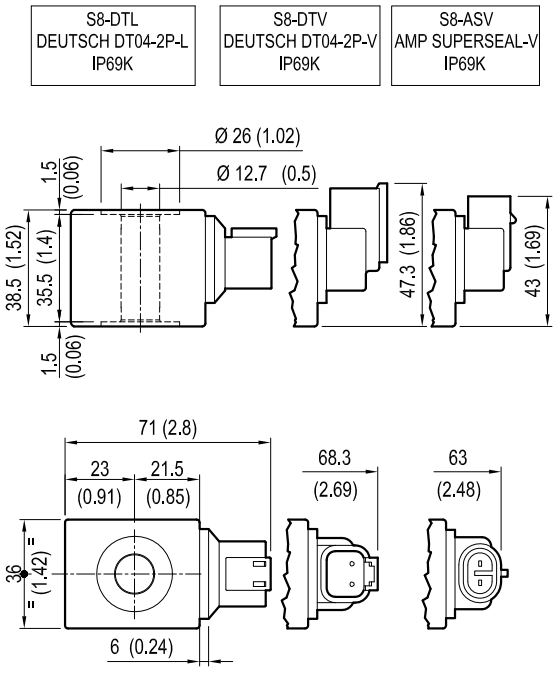

[mm / Inches]

X	Y	Connections	Circuit	Voltage
20	30	DEUTSCH DT04-2P-L	Standard	DC
20	3P	DEUTSCH DT04-2P-V	Standard	DC
30	3P	AMP SUPERSEAL-V	Standard	DC
22	30	DEUTSCH DT04-2P-L	Bidirectionl Diode	DC
22	3P	DEUTSCH DT04-2P-V	Bidirectional Diode	DC
32	3P	AMP SUPERSEAL-V	Bidirectional Diode	DC

Z	Voltage V	Resistance Ohm (±7%)	Power W	Current A		ΔT °C (°F)
	Nominal	Ta = 20-25°C (68-77°F)	Cold coil	Cold coil	Hot coil	1 hour energized at Ta=20-25°C (68-77°F) Nominal voltage
OB	12 DC	7.2	20	1.7	1.2	105-110 (221-230)
OC	24 DC	28.2	20	0.9	0.6	
AC	26 DC	33.6	20	0.8	0.5	

These coils have passed the THERMAL SHOCK DUNK TEST

Coils - Connectors

Preferred types (readily available)

Type	Material number
OD02170130AC00	R901058832
OD02170130OB00	R901090821
OD02170130OC00	R901083065
OD02170130OG00	R901144215
OD02170130OV00	R901090820
OD02170130OW00	R901087981
OD02170730AC00	R934000494
OD02170730OB00	R901094604
OD02170730OC00	R901094607
OD02170730OG00	R934000498
OD02170G03OB00	R901100773
OD02170G03OC00	R901100775
OD02171430OB00	R901131889
OD02171430OC00	R901121821
OD02171530AC00	R901133139
OD02171530OB00	R901111032

Type	Material number
OD02171530OC00	R901125292
OD02172030OB00	R901094609
OD02172030OC00	R901094611
OD0217203PAC00	R934000509
OD0217203POB00	R901110014
OD0217203POC00	R901110015
OD02172230OB00	R901130433
OD02172230OC00	R901130401
OD02172230OG00	R934003033
OD0217223POB00	R901120671
OD0217223POC00	R901114602
OD0217303PAC00	R934000516
OD0217303POB00	R901110016
OD0217323POB00	R934000519
OD02170H03OG00	R934004360
OD02170130AF00	R934003029

Further types available by request

Coils - Connectors

COIL S8-356 - CLASS H - 17 W OD.02.27 - X - Y - Z

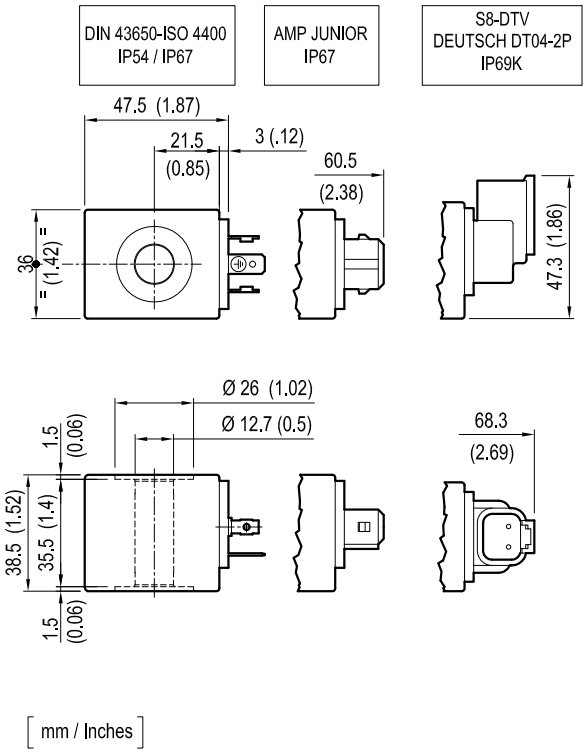

TECHNICAL DATA
Weight: 0.18 kg (0.40 lbs)
Heat insulation Class H: 180°C (356°F)
Ambient temperature range: -30/+80°C (-22/+176°F)

Inlet voltage fluctuations must not exceed ±10% (not welded solenoid type) ±15% (other welded solenoid type) of nominal voltage to obtain correct operation and long life coils.

X	Y	Connections	Circuit	Voltage
01	30	DIN 43650 - ISO 4400	Standard	DC
07	30	AMP JUNIOR	Standard	DC
15	30	AMP JUNIOR	Bidirectionl Diode	DC
20	30	DEUTSCH DT04-2P-L	Standard	DC
20	3P	DEUTSCH DT04-2P-V	Standard	DC

Z	Voltage V	Resistance Ohm (±7%)	Power W	Current A		ΔT °C (°F)
	Nominal	Ta = 20-25°C (68-77°F)	Cold coil	Cold coil	Hot coil	1 hour energized at Ta=20-25°C (68-77°F) Nominal voltage
OB	12 DC	8.4	17	1.4	1.0	85-90 (185-194)
OG	14 DC	11.4	17	1.2	0.8	
OC	24 DC	33.7	17	0.7	0.5	

Preferred types (readily available)

Type	Material number
OD02270730OG00	R934003645
OD02271530OG00	R934003888
OD02272030OB00	R934003647
OD02272030OG00	R934003648
OD02272030OC00	R934003649
OD0227203POB00	R934003650
OD0227203POG00	R934003651
OD0227203POC00	R934003652

Type	Material number

Further types available by request

Coils - Connectors

COIL S8-356 - G2 - CLASS H - 19.5 W OD.02.28 - X - Y - Z

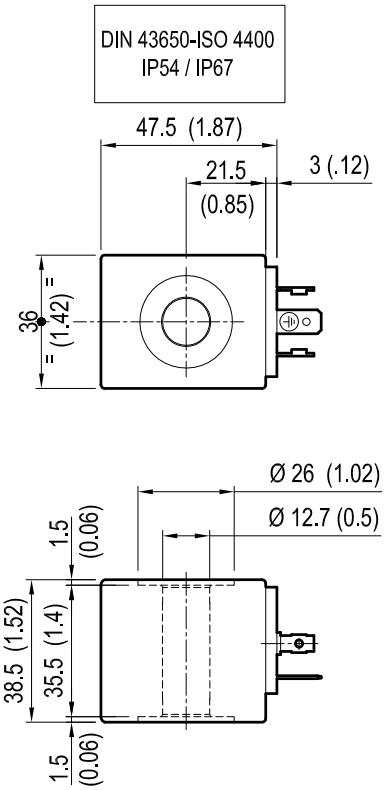

[mm / Inches]

TECHNICAL DATA
Weight DC: 0.20 kg (0.44 lbs)
Weight RAC: 0.19 kg (0.42 lbs)
Heat insulation Class H: 180°C (356°F)
Ambient temperature range: -30/+60°C (-22/+140°F)

Inlet voltage fluctuations must not exceed ±10%

X	Y	Connections	Circuit	Voltage
01	30	DIN 43650 - ISO 4400	Standard	DC - RAC

Z	Voltage V	Resistance Ohm (±7%)	Power W	Current A		ΔT °C (°F)
	Nominal	Ta = 20-25°C (68-77°F)	Cold coil	Cold coil	Hot coil	1 hour energized at Ta=20-25°C (68-77°F) Nominal voltage
GV	230 DC	2697.73	19.5	* 0.075	* 0.058	95-100 (205-215)
GA	230 RAC	2179.39	19.5	* 0.087	* 0.064	

* Note: current valves with Ta= 60 °C (140 °F)

Preferred types (readily available)

Type	Material number
OD02280130GA00	R934004894
OD02280130GV00	R934004895

Type	Material number

Further types available by request

Coils - Connectors

COIL S5 - CLASS H - 20 W

OD.02.09 - X - Y - Z - 01

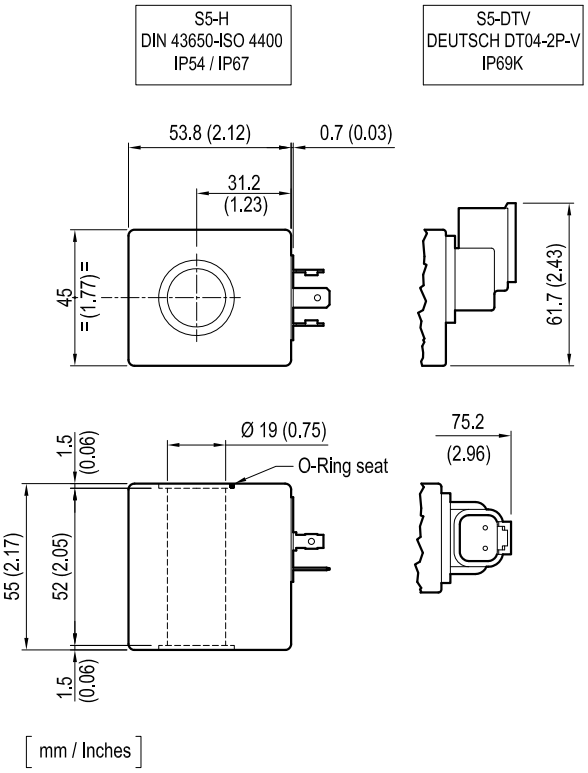

TECHNICAL DATA
Weight: 0.47 kg (1.04 lbs)
Heat insulation Class H: 180°C (356°F)
Ambient temperature range: -30/+70°C (-22/+158°F)
Inlet voltage fluctuations must not exceed ±10% of nominal voltage to obtain correct operation and long life coils.

X	Y	Connections	Circuit	Voltage
01	30	DIN 43650 - ISO 4400	Standard	DC
20	3P	DEUTSCH DT-04-2P-V	Standard	DC
22	3P	DEUTSCH DT-04-2P-V	Bidirectional Diode	DC

Z	Voltage V	Resistance Ohm (±7%)	Power W	Current A		ΔT °C (°F)
	Nominal	Ta = 20-25°C (68-77°F)	Cold coil	Cold coil	Hot coil	1 hour energized at Ta=20-25°C (68-77°F) Nominal voltage
OB	12 DC	6.2	23	1.9	1.4	92-96 (198-205)
OC	24 DC	24.9	23	1.0	0.7	

Preferred types (readily available)

Type	Material number
OD02090130OB01	R901090827
OD02090130OC01	R901090828
OD0209203POB01	R901110011

Type	Material number
OD0209203POC01	R901110012
OD0209223POB01	R901090829
OD0209223POC01	R901110013

Further types available by request

Coils - Connectors

COIL S7 - CLASS H - 30 W

OD.02.07 - X - Y - Z - 02

S7-H
DIN 43650-ISO 4400
IP54 / IP67

SINGLE LEAD
IP54

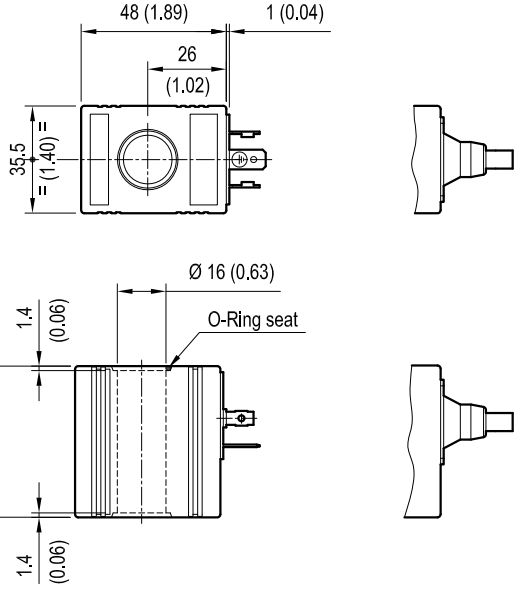

[mm / Inches]

TECHNICAL DATA

Weight: 0.33 kg (0.73 lbs)
Heat insulation Class H: 180°C (356°F)
Ambient temperature range: -30/+60°C (-22/+140°F)
Inlet voltage fluctuations must not exceed ±10% of nominal voltage to obtain correct operation and long life coils.

X	Y	Connections	Circuit	Voltage
01	30	DIN 43650 - ISO 4400	Standard	DC
0H	02	SINGLE LEAD	Bidirectional Diode	DC *

* Length 200 mm (7.87 inches). Ext. diameter 0.53 mm (0.02). External and internal Shealth Silicone rubber.

Z	Voltage V	Resistance Ohm (±7%)	Power W	Current A		ΔT °C (°F)
	Nominal	Ta = 20-25°C (68-77°F)	Cold coil	Cold coil	Hot coil	1 hour energized at Ta=20-25°C (68-77°F) Nominal voltage
OB	12 DC	4.8	30	2.5	1.8	120-140 (248-284)
OC	24 DC	18.8	30	1.2	0.9	

S7-D
DEUTSCH DT04-2P
IP69K

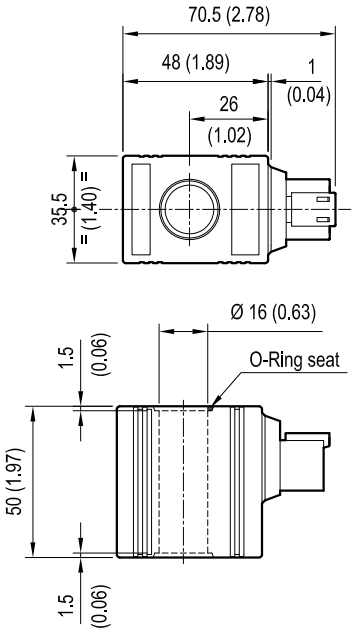

[mm / Inches]

X	Y	Connections	Circuit	Voltage
20	30	DEUTSCH DT04-2P	Standard	DC
22	30	DEUTSCH DT04-2P	Bidirectionl Diode	DC

Z	Voltage V	Resistance Ohm (±7%)	Power W	Current A		ΔT °C (°F)
	Nominal	Ta = 20-25°C (68-77°F)	Cold coil	Cold coil	Hot coil	1 hour energized at Ta=20-25°C (68-77°F) Nominal voltage
OB	12 DC	4.8	30	2.5	1.8	120-140 (248-284)
OG	14 DC	6.5	30	2.1	1.4	
OC	24 DC	18.8	30	1.2	0.9	

Available on request: different voltages, working duty Ed 50 %

These coils have passed the THERMAL SHOCK DUNK TEST

Note: for general information see “Section 7 - Techinal Data”

Preferred types (readily available)

Type	Material number
OD02070130OB02	R901090824
OD02070130OC02	R901090825
OD02072030OB02	R901094589
OD02072030OG02	R934000349
OD02072230OG02	R934000355

Type	Material number
OD02072030OC02	R901094594
OD02072230OB02	R901094595
OD02072230OC02	R901094597
OD02070H02OB02	R934004373

Further types available by request

Coils - Connectors

COIL S7 - CLASS H - 26 W OD.02.37 - X - Y - Z - 02

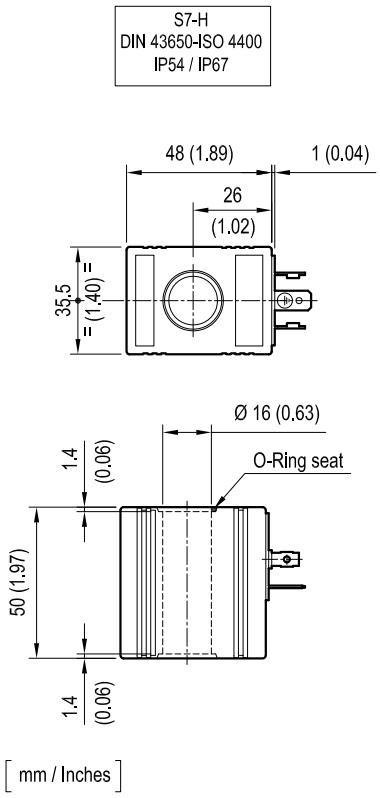

TECHNICAL DATA

Weight: 0.33 kg (0.73 lbs)
Encapsulating material: IXEF
Heat insulation Class H: 180°C (356°F)
Ambient temperature range: -30/+80°C (-22/+176°F)
Inlet voltage fluctuations must not exceed ±15% of nominal voltage to obtain correct operation and long life coils.

X	Y	Connections	Circuit	Voltage
01	30	DIN 43650 - ISO 4400	Standard	DC

Z	Voltage V	Resistance Ohm (±7%)	Power W	Current A		ΔT °C (°F)
	Nominal	Ta = 20-25°C (68-77°F)	Cold coil	Cold coil	Hot coil	1 hour energized at Ta=20-25°C (68-77°F) Nominal voltage
OB	12 DC	5.5	26	2.2	1.6	100-120 (212-248)
OC	24 DC	21.9	26	1.1	0.8	

Preferred types

Type	Material number
OD02370130OC02	R934003700

Type	Material number

Further types available by request

Coils - Connectors

COIL C45 - CLASS H

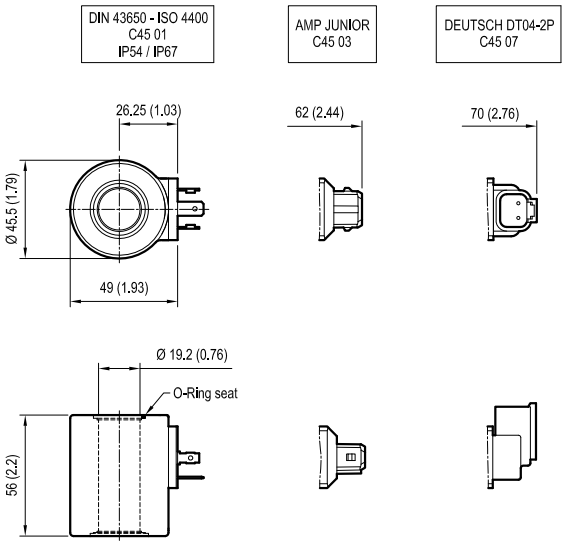

[mm / Inches]

TECHNICAL DATA

Weight: 0.34 kg (0.75 lbs)
Heat insulation Class H: 180°C (356°F)
Ambient temperature range: -30/+60°C (-22/+140°F)
Inlet voltage fluctuations must not exceed ±10% of nominal voltage to obtain correct operation and long life coils.

Connection

DIN 43650 - ISO 4400

Description	Voltage V	Power W	Current A to 20°C	Resistance Ω ±7% to 20°C	Code	Material Number
C45 01 12DC	12 DC	33	2.8	4.2	271-0417	R933000026
C45 01 24DC	24 DC	33	1.4	17.1	271-0418	R933000034

Connection

AMP JUNIOR

Description	Voltage V	Power W	Current A to 20°C	Resistance Ω ±7% to 20°C	Code	Material Number
C45 03 12DC	12 DC	33	2.8	4.2	271-041710	R933000027
C45 03 24DC	24 DC	33	1.4	17.1	271-041725	R933003630

Connection

DEUTSCH DT04-2P

Description	Voltage V	Power W	Current A to 20°C	Resistance Ω ±7% to 20°C	Code	Material Number
C45 07 12DC	12 DC	33	2.8	4.2	271-041717	R933000030
C45 07 24DC	24 DC	33	1.4	17.1	271-041719	R933000032

Coils - Connectors

COIL R7 - CLASS H - 18 W OD.02.21 - X - Y - Z - 00

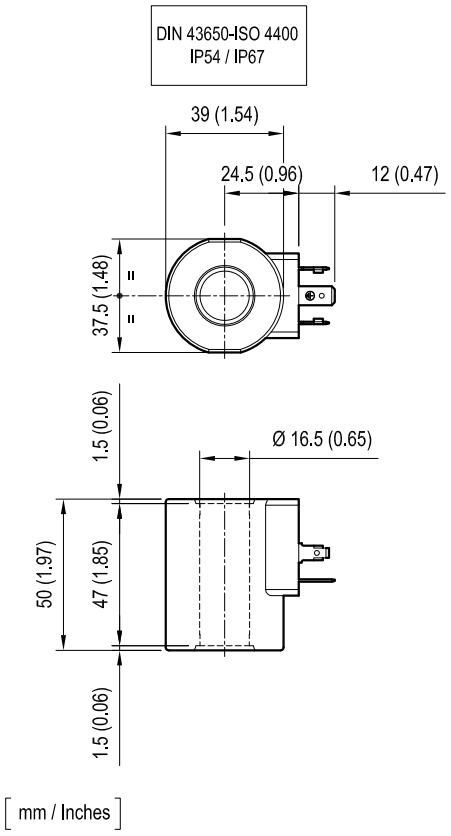

TECHNICAL DATA

Weight: 0.31 kg (0.71 lbs)
Heat insulation Class H: 180°C (356°F)
Ambient temperature range: -30/+80°C (-22/+284°F)
Inlet voltage fluctuations must not exceed ±15% of nominal voltage to obtain correct operation and long life coils.

X	Y	Connections	Circuit	Voltage
01	30	DIN 43650 - ISO 4400	Standard	DC

Z	Voltage V	Resistance Ohm (±7%)	Power W	Current A		ΔT °C (°F)
	Nominal	Ta = 20-25°C (68-77°F)	Cold coil	Cold coil	Hot coil	1 hour energized at Ta=20-25°C (68-77°F) Nominal voltage
OB	12 DC	7.9	18	1.5	1.1	90-105 (194-221)

Preferred types (readily available)

Type	Material number
OD02210130OB00	R934001302

Type	Material number

Further types available by request

Coils - Connectors

COIL R7 - CLASS H - 28 W OD.02.22 - X - Y - Z - 00

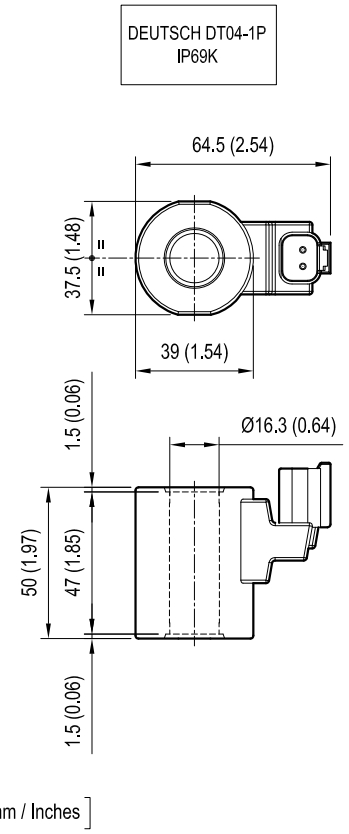

TECHNICAL DATA

Weight: 0.31 kg (0.71 lbs)
Heat insulation Class H: 180°C (356°F)
Ambient temperature range: -20/+50°C (-4/+122°F)

X	Y	Connections	Circuit	Voltage
31	3P	DEUTSCH DT04-28	Single diode	DC

Z	Voltage V	Resistance Ohm (±7%)	Power W
	Nominal	Ta = 20-25°C (68-77°F)	Cold coil
OC	24 DC	20.4	28

Preferred types (readily available)

Type	Material number
OD0222313POC00	R934005009
OD0222313POC00	R934005009

Type	Material number

Further types available by request

Coils - Connectors

COIL GZ37 ON/OFF - CLASS H - 22W 37 - X - 22G - Y 00

DIN EN 175301 - 803 IP65 | DEUTSCH DT04 - 2P C37 | AMP JUNIOR C37 | KOSTAL M27x1 C37

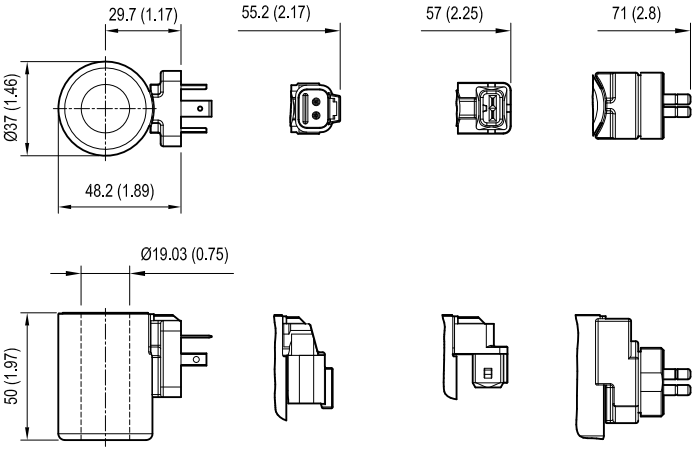

[mm / Inches]

TECHNICAL DATA

Weight: 0.24 kg (0.53 lbs)
Heat insulation Class H: 180°C (356°F)
Ambient temperature range: -40/+110°C (-40/+230°F)
Inlet voltage fluctuations must not exceed ±15% of nominal voltage to obtain correct operation and long life coils.
Coils are not equipped with suppression diode.
Coating to DIN 50962 - Fe // ZnNi with thick film passivation. (Salt spray test to DIN 50021 720 h)

X	Connection	Type of protection
C4	AMP JUNIOR TIMER	IP 66 (IP69K with connector R901022127) see RE08006
K40	DT04-2PA DEUTSCH	IP 69K
K4	DIN 43650 - ISO4400	IP65
K46	KOSTAL	IP65

Y	Voltage V	Resistance Ohm ± 5%	Power W
	Nominal	T= 20°C (68°F)	T= 20° (68°F) Nominal Voltage
12	12 DC	6.4	22
24	24 DC	25.8	22
48	48 DC	101	22
96	96 DC	387	22
205	205 DC	1870	22

Preferred types

Type	Material number
37-C4-22G1200	R900315818
37-C4-22G2400	R900315819
37-K40-22G1200	R900729189
37-K40-22G2400	R900729190
37-K4-22G1200	R900991678
37-K4-22G2400	R900991121

Type	Material number
37-K4-22G4800	R901037025
37-K4-24G9600	R900704587
37-K4-22G20500	R900704588
37-K46-22G1200	R901269304
37-K46-22G2400	R901237400

Coils - Connectors

COIL GP37 PROPORTIONAL - CLASS H 37 - X - RY - Y 00

DIN EN 175301 - 803 IP65 | DEUTSCH DT04 - 2P C37 | AMP JUNIOR C37 | KOSTAL M27x1 C37

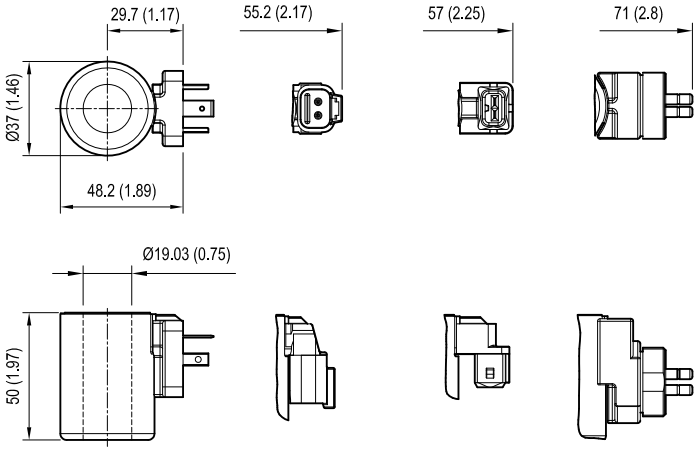

[mm / Inches]

TECHNICAL DATA

Weight: 0.24 kg (0.53 lbs)
Heat insulation Class H: 180°C (356°F)
Ambient temperature range: -40/+110°C (-40/+230°F)
Inlet voltage fluctuations must not exceed ±15% of nominal voltage to obtain correct operation and long life coils.
Coils are not equipped with suppression diode.
Coating to DIN 50962 - Fe // ZnNi with thick film passivation. (Salt spray test to DIN 50021 720 h)
Recommended dither frequency (PWM) 120 Hhz

X	Connection	Type of protection
C4	AMP JUNIOR TIMER	IP 66 (IP69K with connector R901022127) see RE08006
K40	DT04-2PA DEUTSCH	IP 69K
K4	DIN 43650 - ISO4400	IP65
K46	KOSTAL	IP65

Y	Nominal Voltage (V)	Resistance at 20°C / 68°F ± 5% (Ohm)	Resistance max. hot valve (Ohm)	Max. control current I max. (mA)	Minimum terminal voltage to get I max. at max. hot resistance (V)
2,3	12 DC	2.3	3.8	1760	6.7
4,8	24 DC	4.8	7.9	1200	9.5
11,5	24 DC	11.5	18.5	800	14.5

Preferred types

Type	Material number
37-C4-R11,500	R901049963
37-C4-R2,300	R901003044
37-C4-R4,800	R901003026
37-K40-R11,500	R901050010
37-K40-R2,300	R901003055
37-K40-R4,800	R901003053

Type	Material number
37-K4-R11,500	R901049962
37-K4-R2,300	R901002932
37-K4-R4,800	R901002319
37-K46-R11,500	R901117075
37-K46-R2,300	R901103949
37-K46-R4,800	R901103947

Coils - Connectors

COIL D36 - CLASS H - 20 W OD.02.36 - X - Y - Z

TECHNICAL DATA
Weight: 0.18 kg (0.40 lbs)
Power: 20 W
Heat insulation Class H: 180°C (356°F)
Ambient temperature range: -30/+90°C (-22/+194°F)
Further performance limits in terms of temperature and voltage fluctuations: please refer to data sheet of the solenoid valve where D36 coil is mounted.

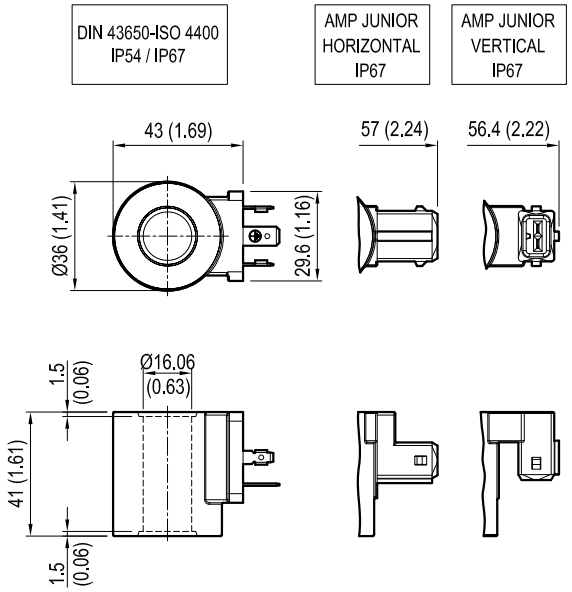

[mm / Inches]

X	Y	Connections	Circuit	Voltage
01	30	DIN 43650 - ISO 4400	Standard	DC
07	30	AMP JUNIOR H	Standard	DC
07	3P	AMP JUNIOR V	Standard	DC
14	30	DIN 43650 - ISO 4400	Bidirectional Diode	DC
15	30	AMP JUNIOR H	Bidirectional Diode	DC
15	3P	AMP JUNIOR V	Bidirectional Diode	DC

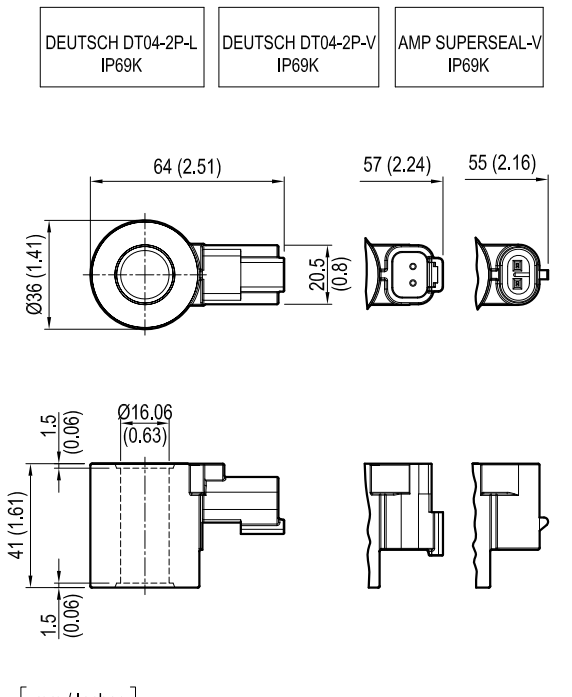

[mm / Inches]

X	Y	Connections	Circuit	Voltage
20	30	DEUTSCH DT04-2P-L	Standard	DC
20	3P	DEUTSCH DT04-2P-V	Standard	DC
30	3P	AMP SUPERSEAL-V	Standard	DC
22	30	DEUTSCH DT04-2P-L	Bidirectional Diode	DC
22	3P	DEUTSCH DT04-2P-V	Bidirectional Diode	DC
32	3P	AMP SUPERSEAL-V	Bidirectional Diode	DC

Coils - Connectors

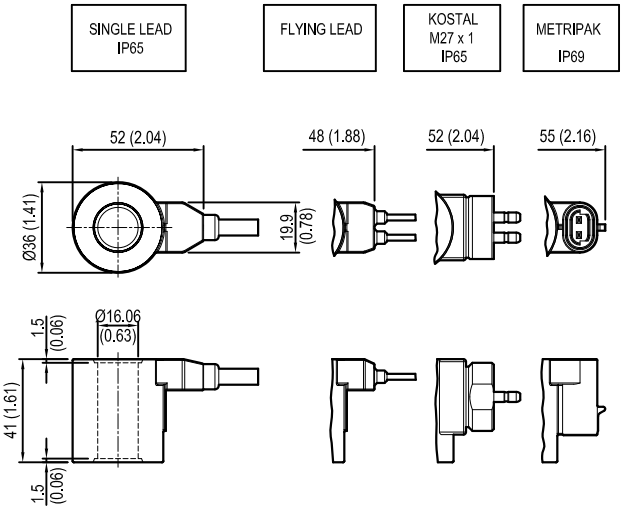

[mm / Inches]

X	Y	Connections	Circuit	Voltage
0G	03	SINGLE LEAD *	Standard	DC
02	03	FLYING LEAD **	Standard	DC
03	30	KOSTAL M27x01	Standard	DC
40	3P	METRIPAK	Standard	DC
0H	03	SINGLE LEAD *	Bidirectional Diode	DC
23	03	FLYING LEAD **	Bidirectional Diode	DC
12	30	KOSTAL M27x01	Bidirectional Diode	DC
41	3P	METRIPAK	Bidirectional Diode	DC

* Lenght 300mm (11.8 inches). Ext. diameter 6.3mm (0.25 inches). External and internal Shealth Silicone rubber.
** Lenght 300mm

Note: Single lead and Flying lead coil also available with 1000 mm lenght; ordering code with Y=10 in place of Y=03

Z	Voltage V	Resistance Ohm (±7%)	Power W	Current A	
	Nominal	aT = 20 °C (68 °F)		I Max.	I Nom.
OB	12 DC	7.4	20	1.67	1.04
OC	24 DC	28.4	20	0.83	0.54
OD	48 DC	106.5	20	0.42	0.29
OU*	96 DC	451	20	0.21	0.14
AH*	205 DC	2062	20	0.10	0.06

* OU and AH versions especially designed in cases of AC supply voltage (respectively for 110AC and 220 AC) to be used in conjunction with connector with circuit including wave rectifier. Ambient temperature range for OU and AH versions: -30°C / + 75°C

Note: diode available only for 12 V DC and 24 V DC coils.
Diode set at 27 V DC for 12 V DC coil and at 39 V DC for 24 V DC coil.

Preferred types

Type	Material number
OD0236403POB00	R901395221
OD02360G03OB00	R901435529
OD02360G10OB00	R901435530
OD02360H03OB00	R901435532
OD02360H10OB00	R901435536
OD02360G03OC00	R901435533
OD02360G10OC00	R901435523
OD02360330OB00	R901395048
OD02360330OC00	R901395057
OD02360730OB00	R901435508
OD02361530OB00	R901435507
OD02360730OC00	R901435506
OD02361530OC00	R901435494
OD02360730OD00	R901435488
OD0236203POB00	R901394391

Type	Material number
OD0236223POB00	R901394397
OD0236203POC00	R901394393
OD0236223POC00	R901394399
OD02360130OB00	R901393412
OD02361430OB00	R901394119
OD02360130OC00	R901393577
OD02361430OC00	R901394225
OD02360130OD00	R901394117
OD02360130OU00	R901394229
OD02360130AH00	R901394231
OD0236303POB00	R901395209
OD0236323POB00	R901395211
OD0236303POC00	R901395213
OD0236323POC00	R901453107

Further types available by request

Coils - Connectors

COIL D36 - CLASS H - 20 W - UL RECOGNIZED OD.02.U6 - X - Y - Z

TECHNICAL DATA
Weight: 0.18 kg (0.40 lbs)
Power: 20 W
Heat insulation Class H: 180°C (356°F)
Ambient temperature range: -30/+70°C (-22/+158°F)
Further performance limits in terms of temperature and voltage fluctuations: please refer to data sheet of the solenoid valve where D36 coil is mounted.

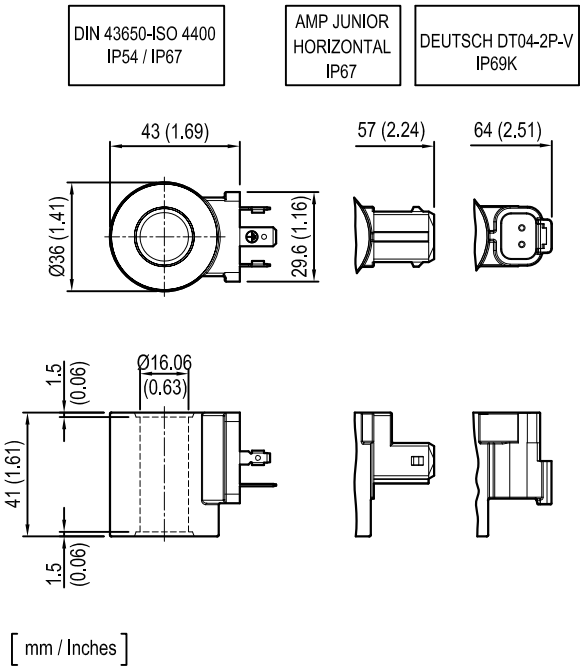

[mm / Inches]

UL file number: **MH48725**

X	Y	Connections	Circuit	Voltage
01	30	DIN 43650 - ISO 4400	Standard	DC
07	30	AMP JUNIOR H	Standard	DC
20	3P	DEUTSCH DT04-2P-V	Standard	DC

Note: UL D36 coil is function interchangeable with standard 20W D36 coil, except for restricted admissible ambient temperature range.

Z	Voltage V	Resistance Ohm (±7%)	Power W	Current A	
	Nominal	aT = 20 °C (68 °F)		I Max.	I Nom.
OB	12 DC	7.4	20	1.67	1.04
OC	24 DC	28.4	20	0.83	0.54
OD	48 DC	106.5	20	0.42	0.29
OU*	96 DC	451	20	0.21	0.14
AH*	205 DC	2062	20	0.10	0.06

***** OU and AH versions especially designed in cases of AC supply voltage (respectively for 110AC and 220 AC) to be used in conjunction with connector with circuit including wave rectifier.

For certification visit the website:
http://database.ul.com/cgi-bin/XYV/template/LISEXT/1FRAME/ccnsrch.html?ccn=

Preferred types

Type	Material number
OD02U60130OB00	R901435522
OD02U60130OC00	R901435521
OD02U60130OD00	R901440932
OD02U60130OU00	R901440933
OD02U60130AH00	R901440934

Type	Material number
OD02U60730OB00	R901435511
OD02U60730OC00	R901435510
OD02U6203POB00	R901435520
OD02U6203POC00	R901435519

Further types available by request

Coils - Connectors

CONNECTOR IP67 - EN 175000 (DIN 4350-A) / ISO 4400

Ambient temperature	- Standard	°C	- 20 to + 100
	-With indicator lamp/rectifier	°C	-20 to + 60
Type of protection according to DIN 40050			IP67 with cable socket mounted and locked
Operating voltage		V	Choose the proper ordering code according to the circuit
Maximum operating current	- Standard	A	16
	- With rectifier	A	1 or 3
Current consumption of LED		mA	approx. 10
LED			Red
Number of pins			2 + PE
Clamping range for cables having an outer diameter of		mm	5, up to 10
Cable entry			Pg9 / Pg11 (unified)
Maximum cable cross-section		mm^2	1.5

Type 1

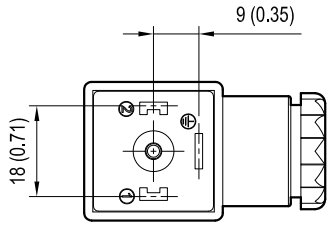

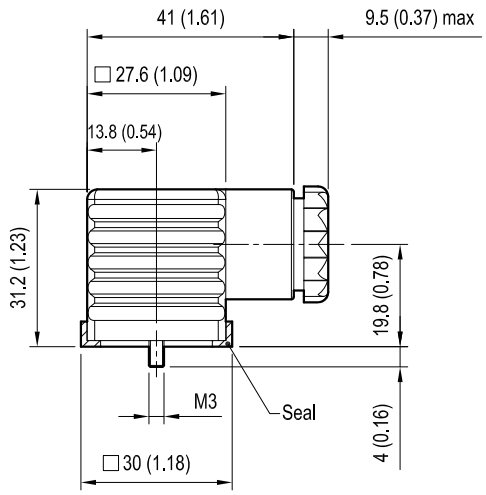

Type 2

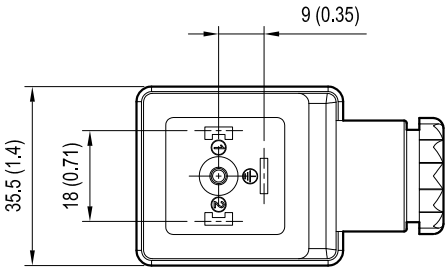

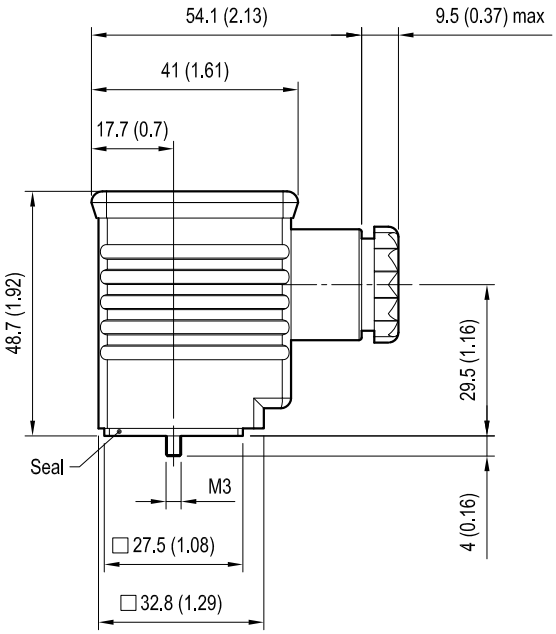

mm / Inches

Coils - Connectors

CONNECTOR IP67 - EN 175000 (DIN 4350-A) / ISO 4400

STANDARD CIRCUIT

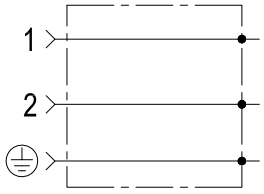

Colour	Valve side	Cable entry	Type connector	Code	Material number
black	B	Pg9 / Pg11	type 1	OD016901000000	R934004344
grey	A	Pg9 / Pg11	type 1	OD016901000003	R934004346

CIRCUIT WITH VDR

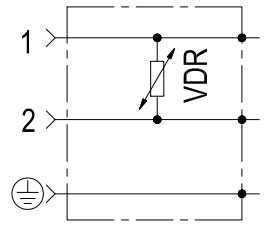

Voltage V AC | DC	Colour	Valve side	Cable entry	Type connector	Code	Material number
12	black	A/B	Pg9 / Pg11	type 1	OD01690700OB00	R934004361
24	black	A/B	Pg9 / Pg11	type 1	OD01690700OC00	R934004362
115	black	A/B	Pg9 / Pg11	type 1	OD01690700OE00	R934004363
230	black	A/B	Pg9 / Pg11	type 1	OD01690700OF00	R934004364

CIRCUIT WITH VDR + LED

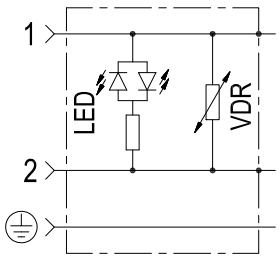

Voltage V AC | DC	Colour	Valve side	Cable entry	Led colour	Type connector	Code	Material number
12	transparent	A/B	Pg9 / Pg11	red	type 1	OD01692100OB00	R934004370
24	transparent	A/B	Pg9 / Pg11	red	type 1	OD01692100OC00	R934004371

Coils - Connectors

CONNECTOR IP67 - EN 175000 (DIN 4350-A) / ISO 4400

CIRCUIT WITH LED

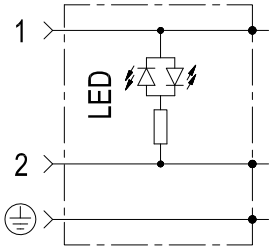

Voltage V AC	Voltage V DC	Colour	Valve side	Cable entry	Led colour	Type connector	Code	Material number
12		transparent	A/B	Pg9 / Pg11	red	type 1	OD01690300OB00	R934004354
24		transparent	A/B	Pg9 / Pg11	red	type 1	OD01690300OC00	R934004355
230		transparent	A/B	Pg9 / Pg11	red	type 1	OD01690300OF00	R934004356

CIRCUIT WITH VDR + WAVE RECTIFIER

Note: for diode with capacity max 1 Amp,
suitable only for **S8-356** coils.

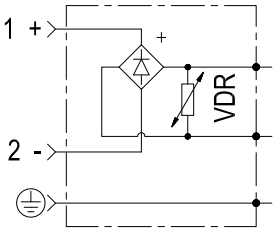

Voltage V AC	Voltage V DC	Diode Capacity I max	Colour	Valve side	Cable entry	Type connector	Code	Material number
115	/	1 A	black	A/B	Pg9 / Pg11	type 1	OD01690201OW00	R934004352
230	/	1 A	black	A/B	Pg9 / Pg11	type 1	OD01690201OZ00	R934004353
24	/	3 A	black	A/B	Pg9 / Pg11	type 2	OD01690200OV00	R934004349
115	/	3 A	black	A/B	Pg9 / Pg11	type 2	OD01690200OW00	R934004350
230	/	3 A	black	A/B	Pg9 / Pg11	type 2	OD01690200OZ00	R934004351

CIRCUIT WITH VDR + WAVE RECTIFIER + LED

Note: for diode with capacity max 1 Amp,
suitable only for **S8-356** coils.

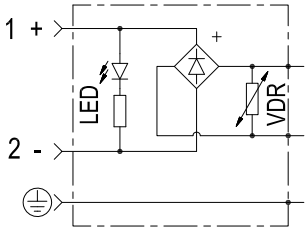

Voltage V AC	Voltage V DC	Diode Capacity I max	Colour	Valve side	Cable entry	Led colour	Type connector	Code	Material number
115	/	1 A	trasparent	A/B	Pg9 / Pg11	red	type 1	OD01691901OW00	R934004369
230	/	3 A	trasparent	A/B	Pg9 / Pg11	red	type 2	OD01691900OZ00	R934004367

Coils - Connectors

CONNECTOR IP67 - EN 175000 (DIN 4350-A) / ISO 4400

CIRCUIT WITH UNIDIRECTIONAL DIODE +LED

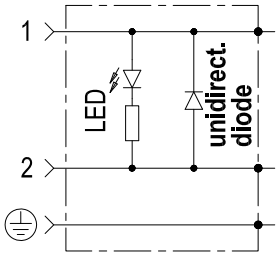

Voltage V		Colour	Valve side	Cable entry	Led colour	Type connector	Code	Material number
AC	DC							
/	12	transparent	A/B	Pg9 / Pg11	red	type 1	OD01691000OB00	R934004365
/	24	transparent	A/B	Pg9 / Pg11	red	type 1	OD01691000OC00	R934004366

Bosch Rexroth Oil Control S.p.A.
Via Leonardo da Vinci 5
P.O. Box no. 5
41015 Nonantola – Modena, Italy
Tel. +39 059 887 611
Fax +39 059 547 848
compact-hydraulics-cv@boschrexroth.com
www.boschrexroth.com\compacthydraulics

© This document, as well as the data, specifications and other information set forth in it, are the exclusive property of Bosch Rexroth Oil Control S.p.a.. It may not be reproduced or given to third parties without its consent.

The data specified above only serve to describe the product. No statements concerning a certain condition or suitability for a certain application can be derived from our information. The information given does not release the user from the obligation of own judgment and verification. It must be remembered that our products are subject to a natural process of wear and aging.

Subject to change.