Rexroth
Bosch Group

RE 18305-02/07.12 1/10
Replaces: 10.09

Stand alone 4/3, 4/2 direct acting directional valve

LF1_2... (LC1F-DZ)

Size 6
Series 00
Maximum operating pressure 310 bar *[4500 psi]*
Maximum flow 70 l/min *[18.5 gpm]*
Port connections G 3/8 - G 1/2 - SAE8


DVI0002

Summary

Description	Page
General specifications	1
Ordering details	2
Spool variants	3
Principles of operation, cross section	4
Technical Data	5
$\Delta p\text{-}Q_v$ characteristic curves	7
External Dimensions and Fittings	8
Electric connections	10

General specifications

- 4 way, 2 or 3 position spool type solenoid operated directional valves.
- Stand-alone valve body intended for “in-line” application. Available with a choice of threaded ports; mounting surface with installation holes for direct fitting on the machine structure.
- Zinc plated body with yellow trivalent chrome treatment.
- Wet pin tubes for DC coils, with push rod for mechanical override; nickel plated surface.
- Coils can be rotated 360° around the tube; they can be energized by AC current through special connectors with rectifier (RAC).
- Plug-in connectors available: EN 175301-803 (was DIN 43650); AMP Junior; DT04-2P (Deutsch), free leads.
- Coils removable.
- Manual override (push button or lever type) available as option.
- Spool variants (for different hydraulic schemes) are available for both 2 and 3 position versions.

Ordering details

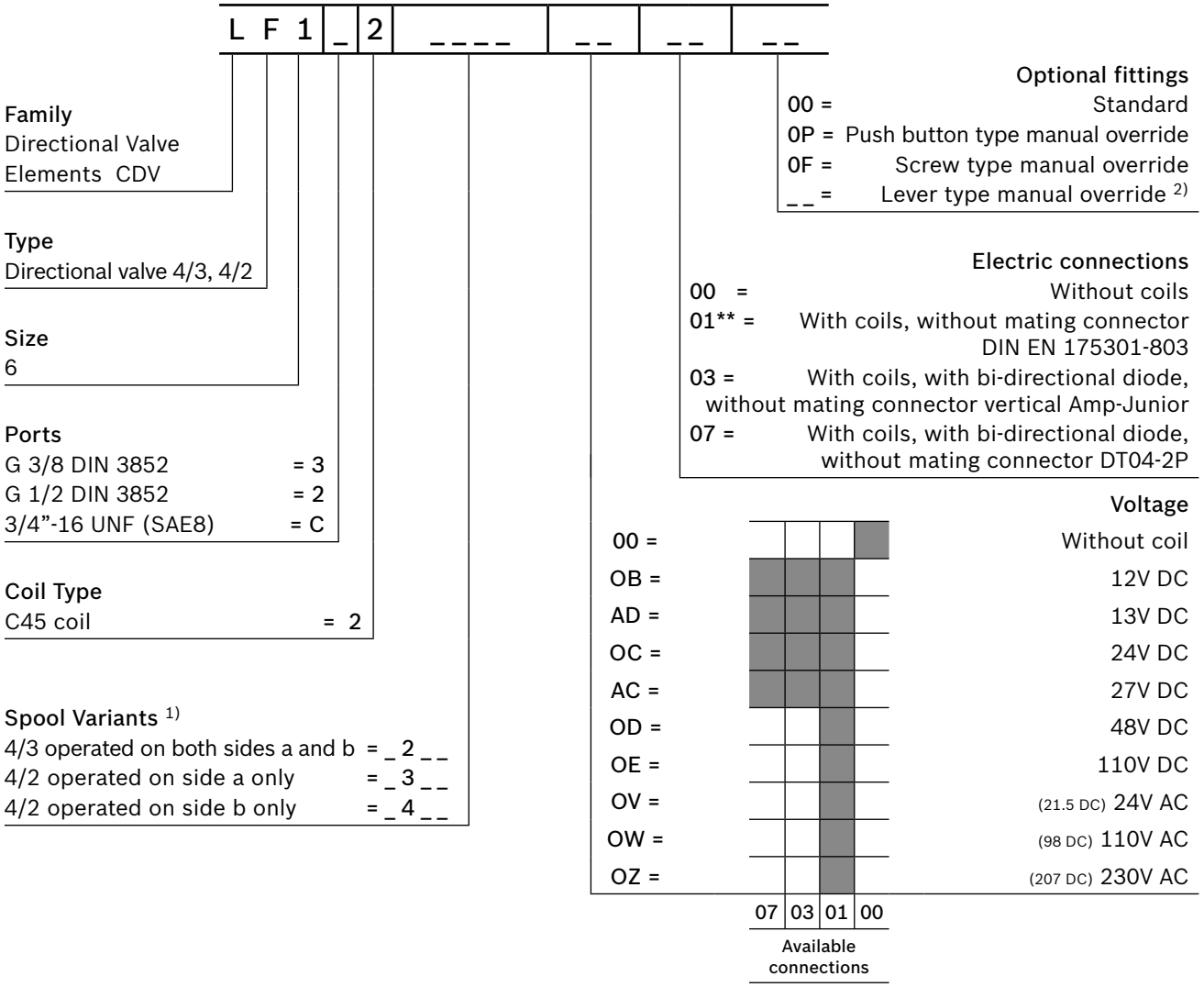

1) The required hydraulic symbol and spool variant can be chosen by consulting page 3.

2) Each different option for the type of emergency chosen implies a specific ordering code (refer to page 9).

** For connectors ordering code see data sheet RE 18325-90.

Spool variants

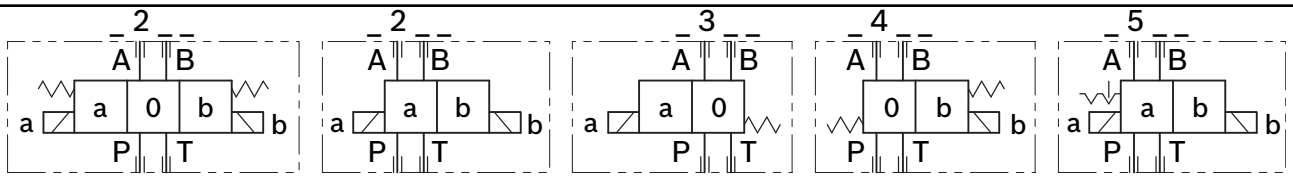

	=A201		=A211
	=C201		=B201
	=E201		=D201
	=F201		=E2A1
	=G209		=G201
	=K209		=K201
	=V201		=U201
	=L201		=M201
	=N201		=A581
	=L501		=M501
	=N501		
	=A301		=A311
	=B301		=A361
	=C301		=B361
	=D301		=C361
	=E301		=D361
	=K301		=E361
	=T301		=N301
	=X301		=T361
	=U369		=Y301
	=A401		=A411
	=A471		=B471
	=B401		=C471
	=C401		=D471
	=D401		=E471
	=E401		=N401
	=K401		=T479
	=T409		=Y401
	=X401		
	=A2EA		=B2EA
	=E2EA		=F2EA

Principles of operation, cross section

The directional valves LC1F_DZ are compact direct operated solenoid valves which control the start, the stop, the direction of the oil flow. They basically consist of a housing (1) with a control spool (2), one or two solenoids (5), and one or two return springs (4).

When energized, each solenoid (5) displaces the control spool (2) from its neutral-central position to the “a” or “b” position and the oil flow P is diverted to A, or to B. Once the solenoid is de-energized, the return spring (4) pushes the spool thrust washer back against the housing and the spool (2) returns in its neutral-central position “0”.

Each coil is fastened to the solenoid tube (5) by a ring nut (6). A pin (7) allows to push the spool (2) in emergency conditions, when the solenoid cannot be energized, like in case of voltage shortage.

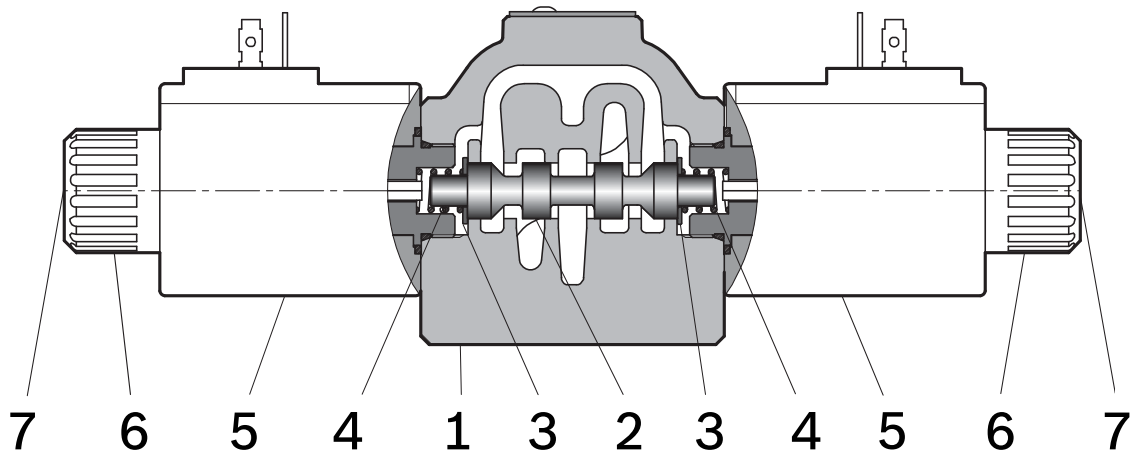

Technical Data (for applications with different specifications consult us)

General

Valve weight with 2 solenoids	kg *[lbs]*	2.23 *[4.92]*
Valve weight with 2 solenoids and Lever override	kg *[lbs]*	2.53 *[5.58]*
Valve weight with 1 solenoid	kg *[lbs]*	1.75 *[3.86]*
Valve weight with 1 solenoid and Lever override	kg *[lbs]*	2.00 *[4.41]*
Mounting position		Unrestricted. Horizontal with spool type _5__
Ambient temperature	°C *[°F]*	–20....+50 *[68....+122]* (with NBR seals)

Hydraulic

Maximum pressure on P, A and B	bar *[psi]*	310 *[4500]*
Maximum pressure on T [1)]	bar *[psi]*	250 *[3625]*
Maximum pressure on T when using spool type A211, A311, A411	bar *[psi]*	150 *[2175]*
Maximum pressure on T with lever override	bar *[psi]*	100 *[1450]*
Maximum flow	l/min *[gpm]*	70 *[18.5]*
Maximum flow when using spool type A201, A301, A361, A401, A471, A2EA, G201, G209	l/min *[gpm]*	50 *[13.2]*
Maximum flow when using spool type A211, A311, A411	l/min *[gpm]*	40 *[10.6]*
Hydraulic fluid General properties: it must have physical lubricating and chemical properties suitable for use in hydraulic systems such as, for example:		Mineral oil based hydraulic fluids HL (DIN 51524 part 1). Mineral oil based hydraulic fluids HLP (DIN 51524 part 2). For use of environmentally acceptable fluids (vegetable or polyglycol base) please consult us.
Fluid Temperature	°C *[°F]*	–20....+80 *[-4....+176]* (NBR seals)
Permissible degree of fluid contamination		ISO 4572: $\beta_x \geq 75$ X=12...15 ISO 4406: class 20/18/15 NAS 1638: class 9
Viscosity range	mm^2/s	5....420
Maximum leakage on A and B ports (P and T pressurised) when using A211 type spools	cc/min *[in^3/min]*	8 - 20 *[0.49 - 1.21]* (100 bar *[1450 psi]*).

[1)] Variation on T line pressure for circuits 5_ with mechanical detent can cause autoinversion.

Electrical

Voltage type		DC (AC only with RAC connection)
Voltage tolerance (nominal voltage)	%	-10 .... +10
Duty		Continuous, with ambient temperature ≤ 50°C *[122°F]*
Coil wire temperature not to be exceeded	°C *[°F]*	150 *[302]*
Insulation class		H
Compliance with		Low Voltage Directive LVD 73/23/EC (2006/95/EC), 2004/108/EC
Coil weight with connection EN 175301-803	kg *[lbs]*	0.335 *[0.74]*

Voltage	V	12	13	24	27	48	110	24 +RAC (21,5)	110 +RAC (98)	230 +RAC (207)
Voltage type		DC	DC	DC	DC	DC	DC	DC	DC	DC
Power consumption	W	33	31	33	33	33	35	33	33	35
Current (nominal at 20°C *[68°F]*)	A	2.8	2.3	1.4	1.2	0.7	0.32	1.6	0.34	0.16
Resistance (nominal at 20°C *[68°F]*)	Ω	4.24	5.42	17	21.8	69.8	341.8	13.6	285	1229

	Voltage (V)	Connector type	Code	Marking	Coil Mat no.
=OB 01	12 DC	EN 175301-803 (Ex. DIN 43650)	C4501 12DC	12 DC	R933000026
=OB 03	12 DC	AMP JUNIOR	C4503 12DC	12 DC	R933000027
=OB 07	12 DC	DEUTSCH DT 04-2P	C4507 12DC	12 DC	R933000030
=AD 01	13 DC	EN 175301-803 (Ex. DIN 43650)	C4501 13DC	13 DC	R933000028
=AD 03	13 DC	AMP JUNIOR	C4503 13DC	13 DC	R933000029
=AD 07	13 DC	DEUTSCH DT 04-2P	C4507 13DC	13 DC	R933000031
=OC 01	24 DC	EN 175301-803 (Ex. DIN 43650)	C4501 24DC	24 DC	R933000034
=OC 03	24 DC	AMP JUNIOR	C4503 24DC	24 DC	R933003630
=OC 07	24 DC	DEUTSCH DT 04-2P	C4507 24DC	24 DC	R933000032
=AC 01	27 DC	EN 175301-803 (Ex. DIN 43650)	C4501 27DC	27 DC	R933000035
=AC 03	27 DC	AMP JUNIOR	C4503 27DC	27 DC	R933000036
=AC 07	27 DC	DEUTSCH DT 04-2P	C4507 27DC	27 DC	R933000033
=OD 01	48 DC	EN 175301-803 (Ex. DIN 43650)	C4501 48DC	48 DC	R933000037
=OE 01	110 DC	EN 175301-803 (Ex. DIN 43650)	C4501 110DC	110 DC	R933000040
=OV 01	24 RAC	EN 175301-803 (Ex. DIN 43650)	C4501 21.5DC	21.5 DC	R933000038
=OW 01	110 RAC	EN 175301-803 (Ex. DIN 43650)	C4501 98DC	98 DC	R933000039
=OZ 01	230 RAC	EN 175301-803 (Ex. DIN 43650)	C4501 207DC	207 DC	R933000041

Characteristic curves

Measured with hydraulic fluid ISO-VG32 at 45° ± 5° C *[113° ± 9° F]*; ambient temperature 20° C *[68° F]*.

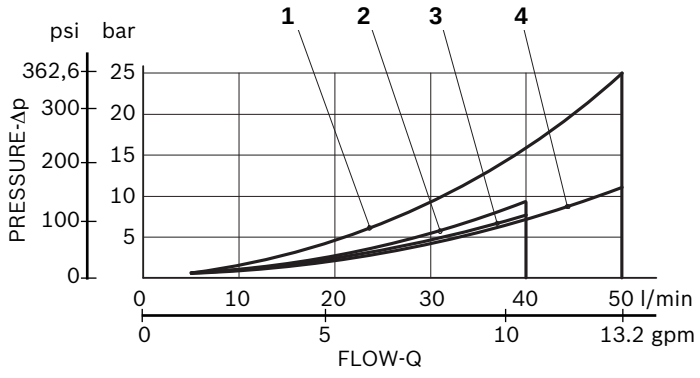

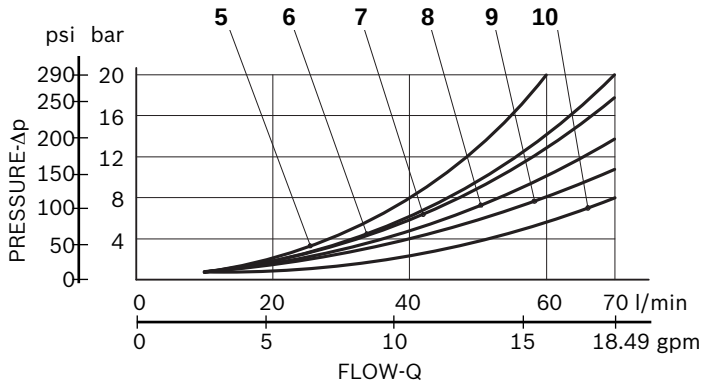

Spool	Curve n°				
	P>T	P>A	P>B	A>T	B>T
A201, A301, A401, A361, A471,A2EA	4	1	1	1	1
A211,A311,A411,	2	3	3	3	3
A581	1	1	1	1	1
B201, B301, B401, B361, B471, B2EA		9	8	7	7
C201. C301, C401, C361, C471, C2EA	9	10	9	8	8
D201, D301, D401, D361, D471		10	10	9	9
E201, E301, E401, E361, E471		8	8	9	9
E2R1		8	8	9	9
F201, F2EA		7	7		
G201,G209	4	1	1	1	1
K201, K209, K301, K401		8	8	7	7
L201, L501		9	8	8	8
M201, M501		8	7	7	7
N201, N501		9	9		
N301, N401		7	7		
T301, T361, T409, T479				7	7
U201, U369		9	5	7	b>a 5
X301, X401, Y301, Y401		8	8	7	7
V201	9	9	9	6	8

Performances limits

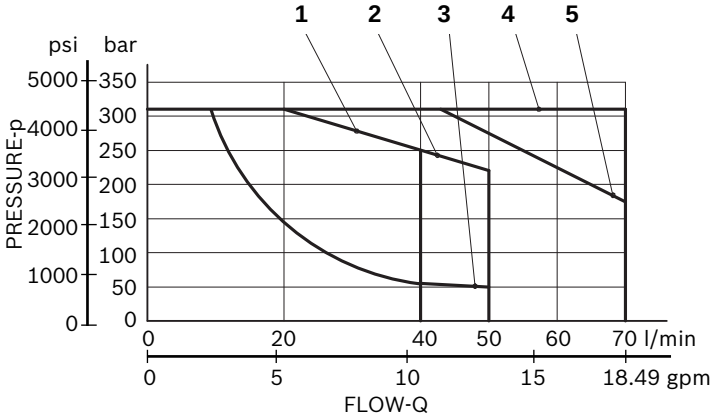

Spool	Curve n°
A211, A311, A411, A581	1
A201, A301, A401	2
N301, N401, V201	3
B201, B301, B401, B361, B471, B2EA, C201. C301, C401, C361, C471, C2EA, D201, D301, D401, D361, D471, E201, E301, E401, E361, E471, E2R1, F201, F2EA, G201,G209, K201, K209, K301, K401, U201, U369, T301, T361, T409, T479, N201, N501, M201, M501, L201, L501	4
X301,X401, Y301, Y401	5

The performance curves are measured with flow going across and coming back, like P>A and B>T. With “lever type” emergency control, the performance limits are slightly lower.

External Dimensions and Fittings

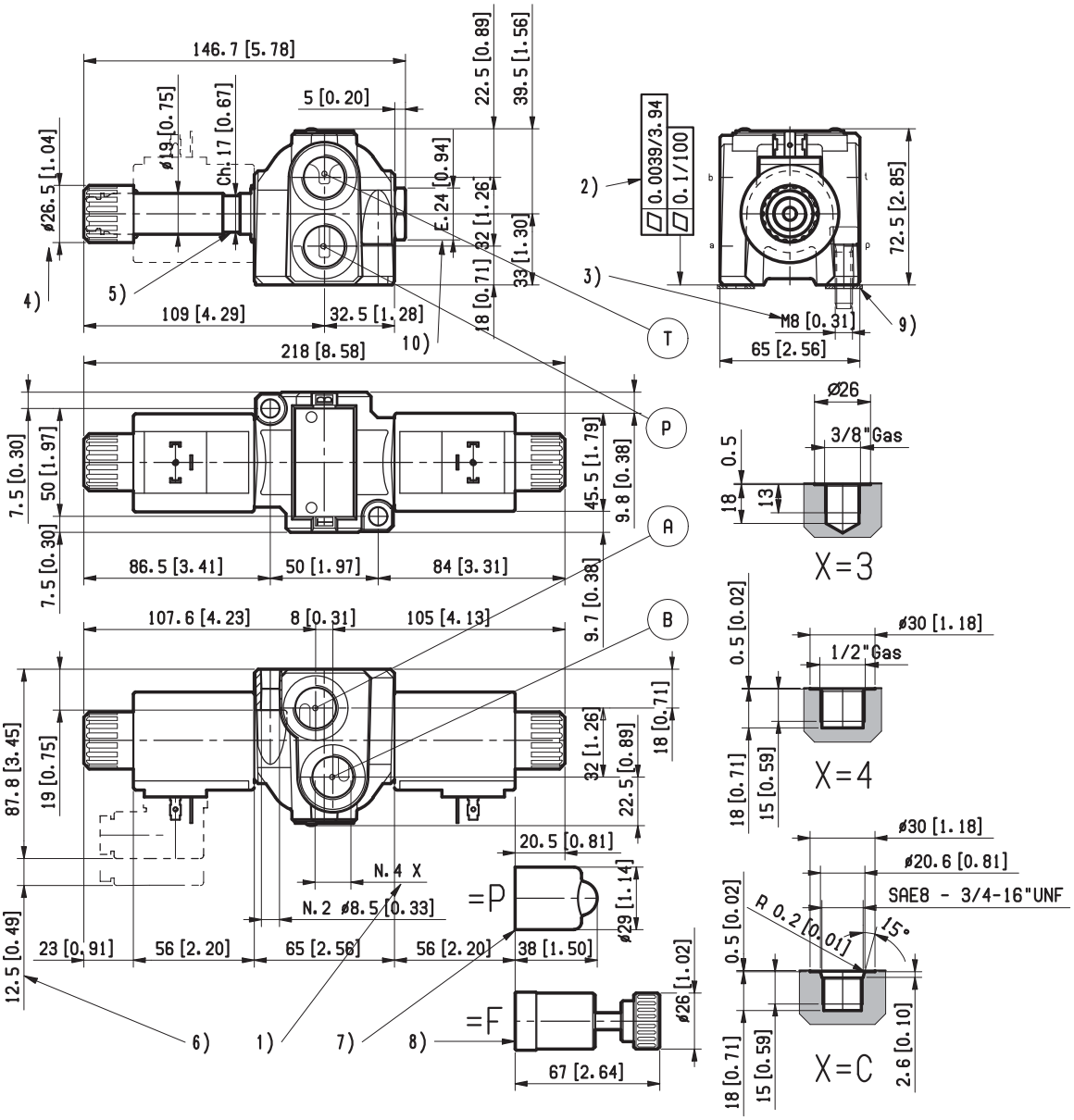

1 Work ports A, B, P, and T.

2 Flatness needed for mounting surface.

3 Two through installation holes reccomended screws M8x30 DIN 8.8.
Must be ordered separately.

4 Ring nut for coil locking. Torque 3-4 Nm *[2.2-3 ft-lb]*.

5 Solenoid tube Ø 19 mm *[0.75 inch]*.

6 Clearance needed for connector removal.

7 Optional push-button manual override for spool opening: it is pressure stuck to the ring nut for coil locking.
Code R933000043.

8 Optional screw type manual override for spool opening: it is screwed (torque 6-7 *[4.4-5.2 ft-lb]*) to the tube as replacement of the coil ring nut. Mat. no R933007215.

9 Kit ring nut for coil locking with seals.
Mat no. R933003529.

External Dimensions and Fittings

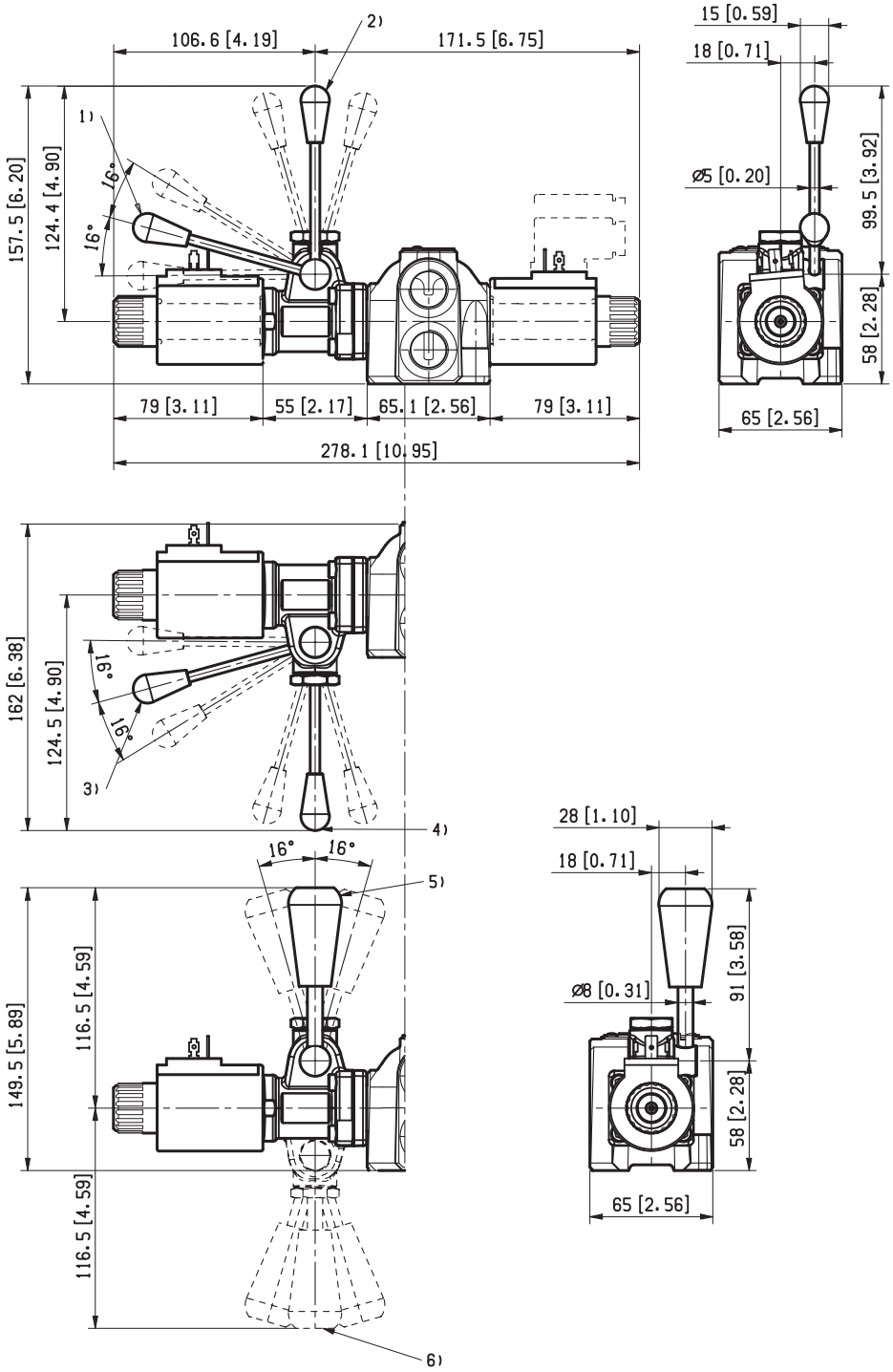

1 Ordering Details: HA (if fitted to side A) or HB (if fitted to side B).
2 Ordering Details: VA (if fitted to side A) or VB (if fitted to side B).
3 Ordering Details: H1 (if fitted to side A) or H9 (if fitted to side B).
4 Ordering Details: V1 (if fitted to side A) or V9 (if fitted to side B).
5 Ordering Details: XA (if fitted to side A) or XB (if fitted to side B).
6 Ordering Details: X1 (if fitted to side A) or X9 (if fitted to side B).

Electric connections

=00	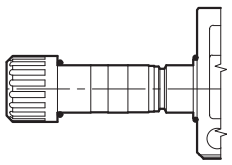	=01	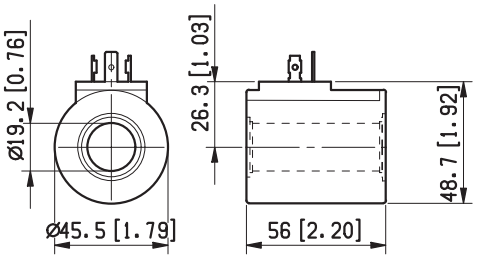
=03	Protection class: IP 65 with female connector properly fitted (see drawing). 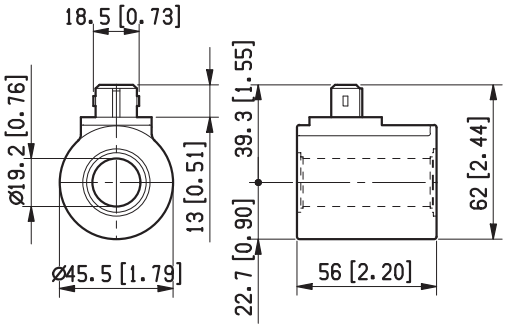	=07	Protection class: IP 69 K with female connector properly fitted (see drawing). 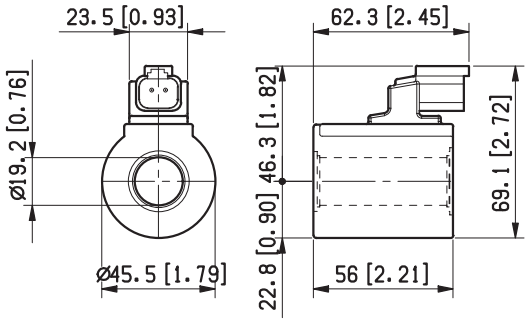

Bosch Rexroth Oil Control S.p.A.
Oleodinamica LC Division
Via Artigianale Sedrio, 12
42030 Vezzano sul Crostolo
Reggio Emilia - Italy
Tel. +39 0522 601 801
Fax +39 0522 606 226 / 601 802
compact-directional-valves@oilcontrol.com
www.boschrexroth.com

© This document, as well as the data, specifications and other information set forth in it, are the exclusive property of Bosch Rexroth Oil Control S.p.a.. It may not be reproduced or given to third parties without its consent.

The data specified above only serve to describe the product. No statements concerning a certain condition or suitability for a certain application can be derived from our information. The information given does not release the user from the obligation of own judgment and verification. It must be remembered that our products are subject to a natural process of wear and aging.

Subject to change.

Rexroth
Bosch Group

Stand alone 4/3, 4/2 direct acting directional valve

RE 18305-01/07.12 1/8
Replaces: 10.09

LF1_1… (LC1F-Z)

Size 6
Series 00
Maximum operating pressure 310 bar *[4500 psi]*
Maximum flow 35 l/min *[9.25 gpm]*
Ports connection G 3/8 - SAE8


DVI0001

Summary

Description	Page
General specifications	1
Ordering details	2
Spool variants	3
Principles of operation, cross section	4
Technical Data	4
Δp-Q_v characteristic curves	5
External Dimensions and Fittings	6
Electric connections	8

General specifications

- 4 way, 2 or 3 position spool type solenoid operated directional valves.
- Stand-alone valve body intended for “in-line” application. Available with a choice of threaded ports; mounting surface with installation holes for direct fitting on the machine structure.
- Zinc plated body with yellow trivalent chrome treatment.
- Wet pin tubes for DC coils, with push rod for mechanical override; nickel plated surface.
- Coils can be rotated 360° around the tube; they can be energized by AC current through special connectors with rectifier (RAC).
- Plug-in connectors available: EN 175301-803 (was DIN 43650); AMP Junior; DT04-2P (Deutsch), free leads.
- Coils removable.
- Manual override (push button or lever type) available as option.
- Spool variants (for different hydraulic schemes) are available for both 2 and 3 position versions.

Ordering Details

L	F	1	_	1	_ _ _ _	_ _	_ _	_ _

Family
Directional Valve Elements CDV

Type
Directional valve 4/3, 4/2

Size
6

Ports
G 3/8 = **3**
SAE 8 = **C**

Coil Type
C36 coil = **1**

Spools
4/3 operated on both sides a and b = **_ 2 _ _**
4/2 operated on side a only = **_ 3 _ _**
4/2 operated on side b only = **_ 4 _ _**

Optional fittings
00 = Standard
0P = Push button type manual override
0F = Screw type manual override

Electric connections
00 = Without coils
01 =** With coils, without mating connector DIN EN 175301-803
03 = With coils, with bi-directional diode, without mating connector vertical Amp-Junior
04 = With coils, with bi-directional diode, without mating connector horizontal Amp-Junior
07 = With coils, with bi-directional diode, without mating connector DT04-2P
31 = With coils and bipolar sheathed lead 350mm *[13,8 in]* long

Voltage supply

	31	07	04	03	01	00	
00 =						■	Without coils
OB =	■	■	■	■	■		12V DC
AD =		■			■		13V DC
OC =	■	■	■	■	■		24V DC
AC =		■			■		27V DC
OD =			■		■		48V DC
OE =					■		110V DC
OV =					■		(21.5 DC) 24V AC
OW =					■		(98 DC) 110V AC
OZ =					■		(207 DC) 230V AC
	Available connections						

** For connectors ordering code see data sheet RE 18325-90.

Spool variants

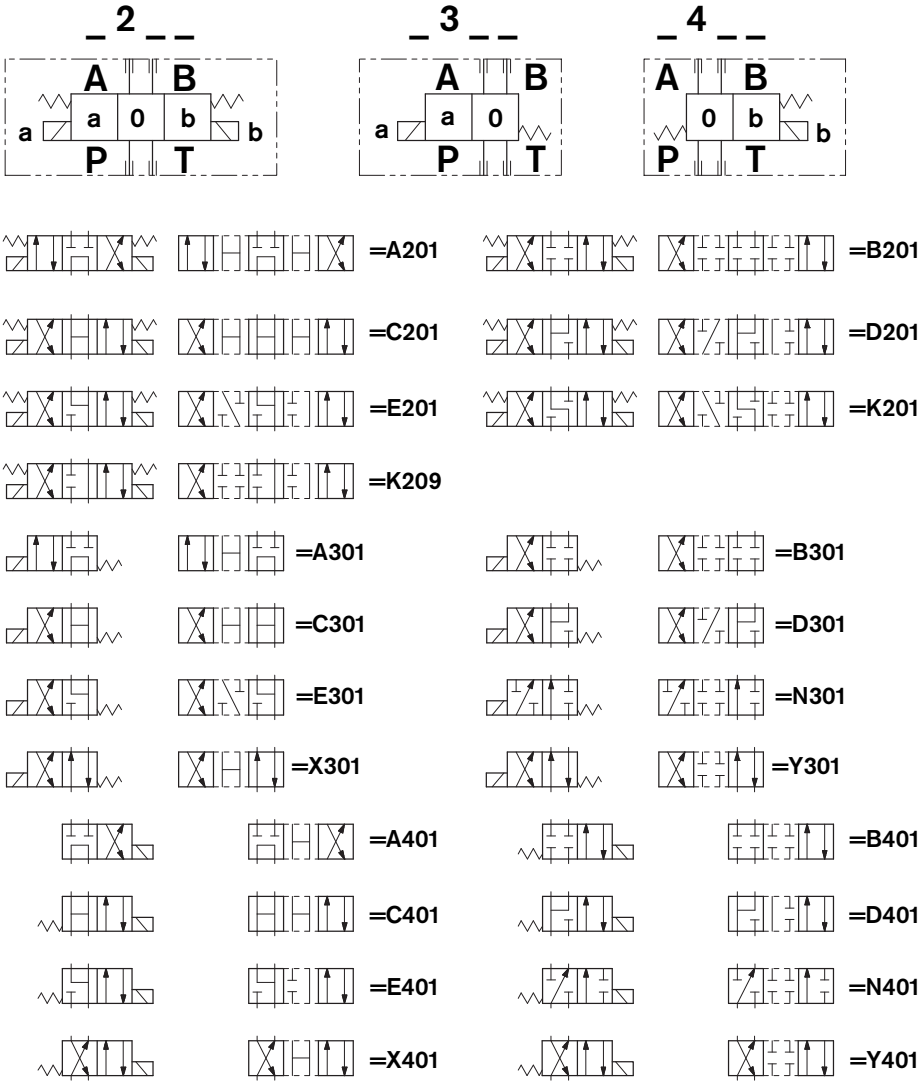

Principles of operation, cross section

The directional valves **LC1F_Z**…are compact direct operated solenoid valves which control the start, the stop, the direction of the oil flow. They basically consist of a housing (1) with a control spool (2), one or two solenoids (5), and one or two return springs (4).

When energized, each solenoid (5) displaces the control spool (2) from its neutral-central position to the “a” or “b” position and the oil flow P is diverted to A, or to B. Once the solenoid is de-energized, the return spring (4) pushes the spool thrust washer back against the housing and the spool (2) returns in its neutral-central position “0”.

Each coil is fastened to the solenoid tube (5) by a ring nut (6). A pin (7) allows to push the spool (2) in emergency conditions, when the solenoid cannot be energized, like in case of voltage shortage.

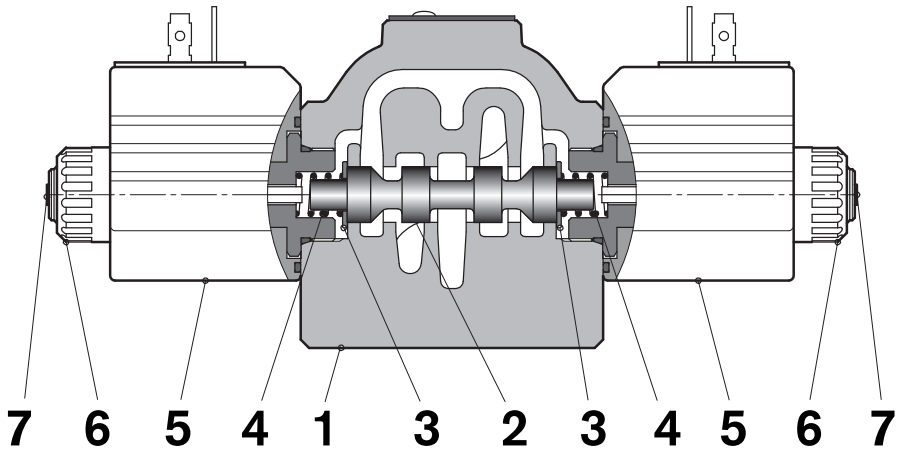

Technical Data (for applications with different specifications consult us)

General

Valve weight with 2 solenoids	kg *[lbs]*	1.85 *[4.01]*
Valve weight with 1 solenoid	kg *[lbs]*	1.55 *[3.42]*
Mounting position		Unrestricted
Ambient temperature	°C *[°F]*	–20..+50 *[68....+122]* (with NBR seals)

Hydraulic

Maximum pressure on **P, A** and **B**	bar *[psi]*	310 *[4500]*
Maximum pressure on **T**	bar *[psi]*	250 *[3625]*
Maximum flow	l/min *[gpm]*	35 *[9.25]*
Maximum flow when using spool type **A201-A301-A401**	l/min *[gpm]*	30 *[7.9]*
Hydraulic fluid General properties: it must have physical lubricating and chemical properties suitable for use in hydraulic systems such as, for example:		Mineral oil based hydraulic fluids HL (DIN 51524 part 1). Mineral oil based hydraulic fluids HLP (DIN 51524 part 2). For use of environmentally acceptable fluids (vegetable or polyglycol base) please consult us.
Fluid Temperature	°C *[°F]*	–20....+80 *[-4....+176]* (NBR seals)
Permissible degree of fluid contamination		IISO 4572: $\beta_x \geq 75$ X=12...15 ISO 4406: class 20/18/15 NAS 1638: class 9
Viscosity range	mm^2/s	5....420

Electrical

Voltage type		DC (AC only with RAC connection)
Voltage tolerance (nominal voltage)	%	-10 .... +10
Duty		Continuous, with ambient temperature ≤ 50°C *[122°F]*
Coil wire temperature not to be exceeded	°C *[°F]*	150 *[302]*
Insulation class		H
Compliance with		Low Voltage Directive LVD 73/23/EC (2006/95/EC), 2004/108/EC
Coil weight with connection EN 175301-803	kg *[lbs]*	0.215 *[0.44]*

Voltage	V	12	13	24	27	48	110	24 +RAC (21,5)	110 +RAC (98)	230 +RAC (207)
Voltage type		DC	DC	DC	DC	DC	DC	AC	AC	AC
Power consumption	W	26	26	26	26	26	26	29	29	29
Current (nominal at 20°C *[68°F]*)	A	2.15	2.00	1.10	1.00	0.54	0.27	1.20	0.29	0.14
Resistance (nominal at 20°C *[68°F]*)	Ω	5.5	6.5	22	28	89	413	18	338	1430

	Voltage (V)	Connector type	Coil description	Marking	Coil Mat no.
=OB 01	12 DC	EN 175301-803 (Ex. DIN 43650)	C3601 12DC	12 DC	R933000044
=OB 03	12 DC	AMP JUNIOR	C3603 12DC	12 DC	R933000047
=OB 04	12 DC	AMP JUNIOR Horizontal	C3604 12DC	12 DC	R933002913
=OB 07	12 DC	DEUTSCH DT 04-2P	C3607 12DC	12 DC	R933000048
=OB 31	12 DC	Cable 350 mm long	C3631 12DC	12 DC	R933000045
=AD 01	13 DC	EN 175301-803 (Ex. DIN 43650)	C3601 13DC	13 DC	R933000051
=AD 07	13 DC	DEUTSCH DT 04-2P	C3607 13DC	13 DC	R933000049
=OC 01	24 DC	EN 175301-803 (Ex. DIN 43650)	C3601 24DC	24 DC	R933000053
=OC 03	24 DC	AMP JUNIOR	C3603 24DC	24 DC	R933000057
=OC 04	24 DC	AMP JUNIOR Horizontal	C3604 24DC	24 DC	R933002914
=OC 07	24 DC	DEUTSCH DT 04-2P	C3607 24DC	24 DC	R933000058
=OC 31	24 DC	Cable 350 mm long	C3637 24DC	24 DC	R933000055
=AC 01	27 DC	EN 175301-803 (Ex. DIN 43650)	C3601 27DC	27 DC	R933000056
=AC 07	27 DC	DEUTSCH DT 04-2P	C3607 27DC	27 DC	R933000050
=OD 01	48 DC	EN 175301-803 (Ex. DIN 43650)	C3601 48DC	48 DC	R933000059
=OD 04	48 DC	AMP JUNIOR Horizontal	C3604 48DC	48 DC	R933002915
=OE 01	110 DC	EN 175301-803 (Ex. DIN 43650)	C3601 110DC	110 DC	R933000061
=OV 01	24 RAC	EN 175301-803 (Ex. DIN 43650)	C3601 21.5DC	21.5 DC	R933000054
=OW 01	110 RAC	EN 175301-803 (Ex. DIN 43650)	C3601 98DC	98 DC	R933000060
=OZ 01	230 RAC	EN 175301-803 (Ex. DIN 43650)	C3601 207DC	207 DC	R933000062

Characteristic curves

Measured with hydraulic fluid ISO-VG32 at 45° ± 5° C *[113° ± 9° F]*; ambient temperature 20° C *[68° F]*.

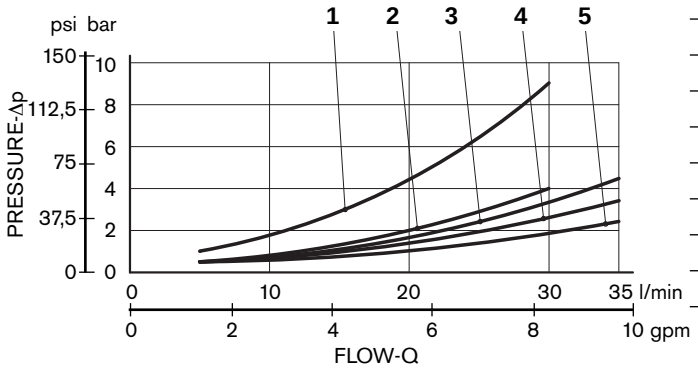

Spool	Curve n°				
	P>T	P>A	P>B	A>T	B>T
A201, A301, A401	2	1	1	1	1
B201, B301, B401		4	4	3	3
C201 . C301, C401	5	5	5	5	5
D201, D301, D401		4	4	3	3
E201, E301, E401		3	3	5	5
K201, K209		4	4	4	4
N301, N401		4	4		
X301, X401, Y301, Y401		4	3	3	3

Performances limits

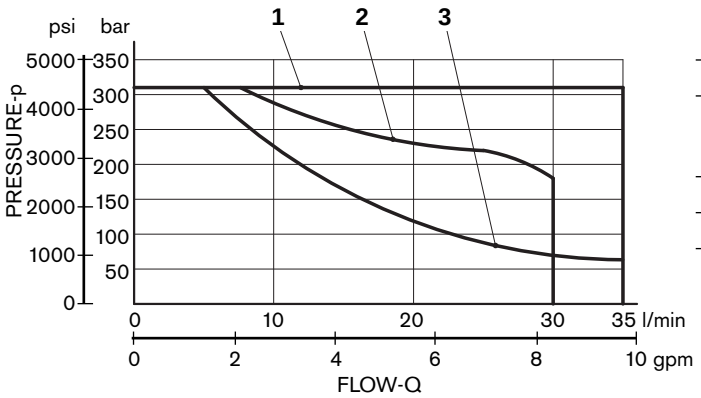

Spool	Curve n°
B201, B301, B401, C201 . C301, C401, D201, D301, D401, E201, E301, E401, K201, K209, X301, X401, Y301, Y401	1
A201, A301, A401	2
N301, N401	3

The performance curves are measured with flow going across and coming back, like P>A and B>T. With unequal IN and OUT flow, the actual total Δp can be considerably lower.

External Dimensions and Fittings

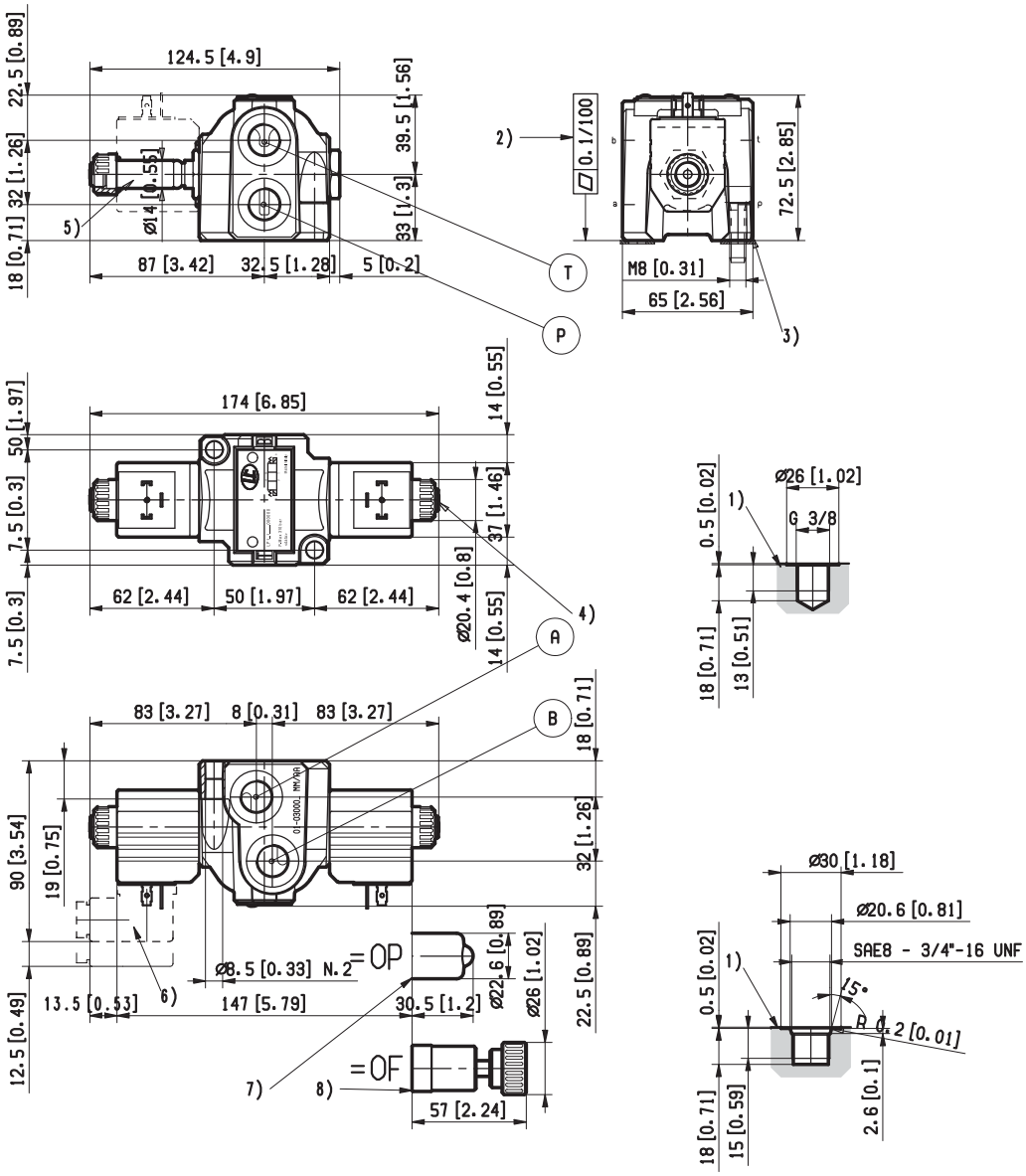

1 Work ports A, B, P, and T.

2 Flatness needed for mounting surface.

3 Two through installation holes reccomended screws M8x30 DIN 8.8: torque 20-22 Nm *[14.7-16.2 ft-lb]*. Must be ordered separately.

4 Ring nut for coil locking. Torque 3-4 Nm *[2.2-3.0 ft-lb]*.

5 Solenoid tube Ø 14 mm *[0.55 inch]*.

6 Clearance needed for connector removal.

7 Optional push-button manual override, 0P type, for spool opening: it is pressure stuck to the ring nut for coil locking. Mat no. R933000042.

8 Optional screw manual override, 0F type, for spool opening: it is screwed (torque 6-7 *[4.4-5.2 ft-lb]*) to the tube as replacement of the coil ring nut. Mat no. R933000021 .

Electric connections

=00	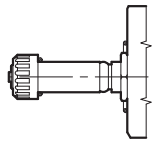	**=01**	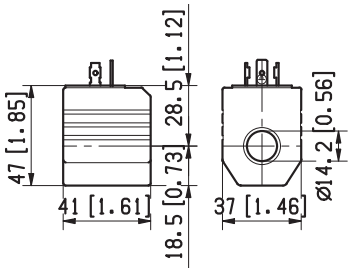
=03	Protection class: IP 65 with female connector properly fitted (see drawing). 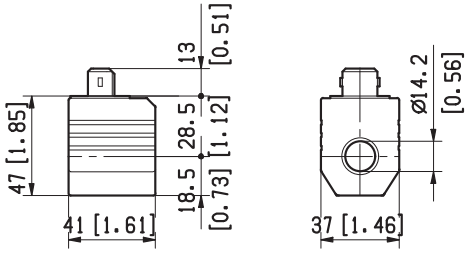	**=04**	Protection class: IP 65 with female connector properly fitted (see drawing). 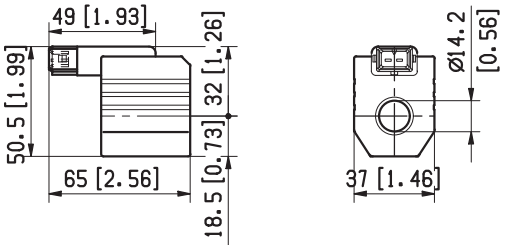
=31	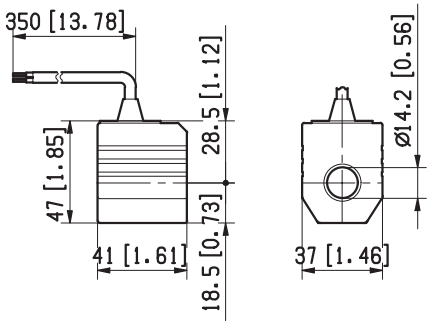	**=07**	Protection class: IP 69 K with female connector properly fitted (see drawing). 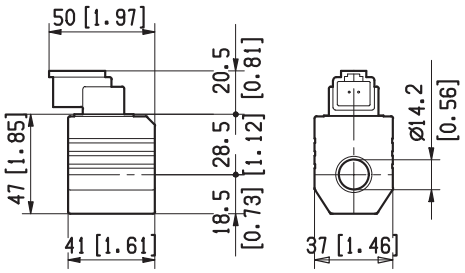

Bosch Rexroth Oil Control S.p.A.
Oleodinamica LC Division
Via Artigianale Sedrio, 12
42030 Vezzano sul Crostolo
Reggio Emilia - Italy
Tel. +39 0522 601 801
Fax +39 0522 606 226 / 601 802
compact-directional-valves@oilcontrol.com
www.boschrexroth.com

© This document, as well as the data, specifications and other information set forth in it, are the exclusive property of Bosch Rexroth Oil Control S.p.a.. It may not be reproduced or given to third parties without its consent.

The data specified above only serve to describe the product. No statements concerning a certain condition or suitability for a certain application can be derived from our information. The information given does not release the user from the obligation of own judgment and verification. It must be remembered that our products are subject to a natural process of wear and aging.

Subject to change.

Rexroth
Bosch Group

Stand alone 4/3, 4/2 direct acting directional valve

RE 18305-03/07.12 1/8
Replaces: 10.09

Tipo LF2_1… (LC2F-DZ)

Size 10
Series 00
Maximum operating pressure 250 bar *[3600 psi]*
Maximum flow 90 l/min *[23.8 gpm]*
Port connections G 1/2 – SAE10


DVI0033

Summary

Description	Page
General specifications	1
Ordering details	2
Spool variants	3
Principles of operation, cross section	4
Technical Data	4
Δp-Q_v characteristic curves	6
External Dimensions and Fittings	7
Electric connections	8

General specifications

- 4 way, 2 or 3 position spool type solenoid operated directional valves.
- Stand-alone valve body intended for “in-line” application. Available with a choice of threaded ports; mounting surface with installation holes for direct fitting on the machine structure.
- Zinc plated body with yellow trivalent chrome treatment.
- Wet pin tubes for DC coils, with push rod for mechanical override; nickel plated surface.
- Coils can be rotated 360° around the tube; they can be energized by AC current through special connectors with rectifier (RAC).
- Plug-in connectors available: EN 175301-803 (was DIN 43650); AMP Junior; DT04-2P (Deutsch), free leads.
- Coils removable.
- Manual override (push button or lever type) available as option.
- Spool variants (for different hydraulic schemes) are available for both 2 and 3 position versions.

Ordering Details

L	F	2	_	1	_ _ _ _	_ _	_ _	_ _

Family
Directional Valve Elements CDV

Type
Directional valve 4/3, 4/2

Size
10

Ports

G 1/2	= **2**
7/8" - 14 UNF (SAE10)	= **D**

Coil Type
C65 coil

Spool variants

4/3 operated on both sides a and b	= _ **2** _ _
4/2 operated on side a only	= _ **3** _ _
4/2 operated on side b only	= _ **4** _ _

Optional fittings

00 =	Standard
0P =	Push button type manual override
0F =	Screw type manual override

Electric connections

00 =	Without coils
01 =**	With coils, without mating connector DIN EN 175301-803
03 =	With coils, with bi-directional diode, without mating connector vertical Amp-Junior
07 =	With coils, with bi-directional diode, without mating connector DT04-2P

Voltage supply

00 =				■	Without coils
OB =	■	■	■		12V DC
AD =	■		■		13V DC
OC =	■	■	■		24V DC
AC =	■		■		27V DC
	07	**03**	**01**	**00**	

Available connections

** For connectors ordering code see data sheet RE 18325-90.

Spool variants

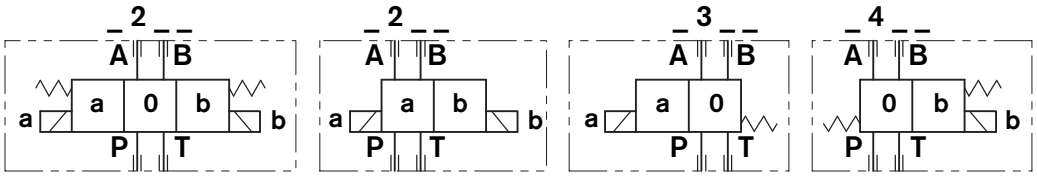



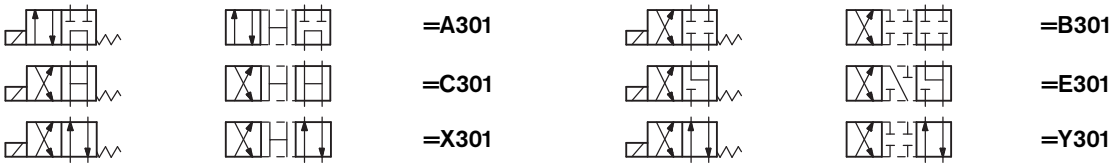



Principles of operation, cross section

The directional valves LC2F_DZ are compact direct operated solenoid valves which control the start, the stop, the direction of the oil flow. They basically consist of a housing (1) with a control spool (2), one or two solenoids (5), and one or two return springs (4).

When energized, each solenoid (5) displaces the control spool (2) from its neutral-central position to the “a” or “b” position and the oil flow P is diverted to A, or to B. Once the solenoid is de-energized, the return spring (4) pushes the spool thrust washer back against the housing and the spool (2) returns in its neutral-central position “0”.

Each coil is fastened to the solenoid tube (5) by a ring nut (6). A pin (7) allows to push the spool (2) in emergency conditions, when the solenoid cannot be energized, like in case of voltage shortage.

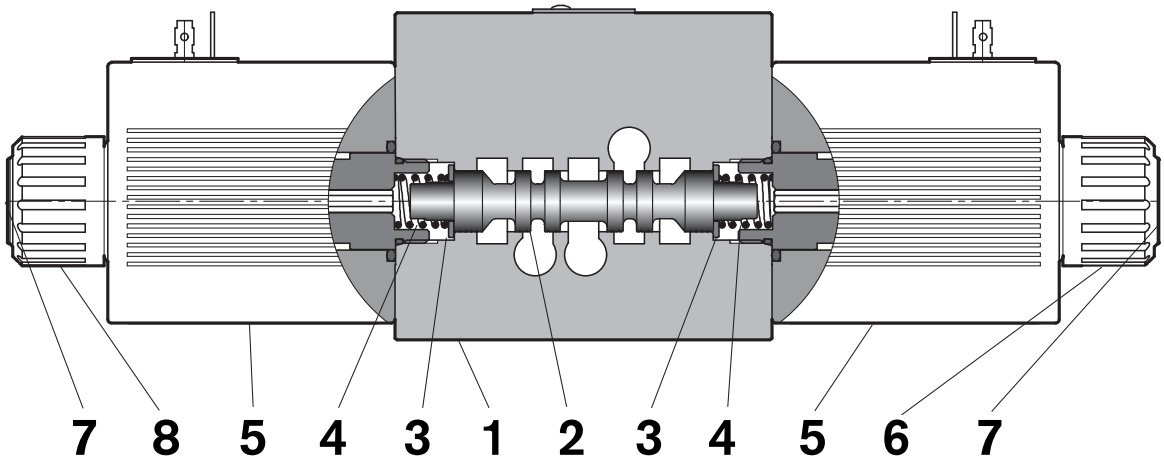

Technical Data (for applications with different specifications consult us)

General

Valve weight with 2 solenoids	kg *[lbs]*	7.45 *[16.42]*
Valve weight with 1 solenoid	kg *[lbs]*	5.85 *[12.9]*
Ambient temperature	°C *[°F]*	–20..+50 *[68....+122]* (with NBR seals)

Hydraulic

Maximum pressure at **P, A** and **B**	bar *[psi]*	250 *[3600]*
Maximum pressure at **T**	bar *[psi]*	210 *[3045]*
Maximum inlet flow	l/min *[gpm]*	90 *[23.8]*
Maximum inlet flow for spool variants A201, A301, A401	l/min *[gpm]*	80 *[21.1]*
Hydraulic fluid General properties: it must have physical lubricating and chemical properties suitable for use in hydraulic systems such as, for example:		Mineral oil based hydraulic fluids HL (DIN 51524 part 1). Mineral oil based hydraulic fluids HLP (DIN 51524 part 2). For use of environmentally acceptable fluids (vegetable or polyglycol base) please consult us.
Fluid Temperature	°C *[°F]*	–20....+80 *[-4....+176]* (NBR seals)
Permissible degree of fluid contamination		IISO 4572: $\beta_x \geq 75$ X=12...15 ISO 4406: class 20/18/15 NAS 1638: class 9
Viscosity range	mm^2/s	5....420

Electrical

Voltage type		DC								
Voltage tolerance (nominal tension)	%	-10 .... +10								
Duty Continuous, with ambient temperature	°C *[°F]*	≤ 50° *[122°F]*								
Coil wire temperature not to be exceeded	°C *[°F]*	150 *[302]*								
Maximum frequency	Hz	2								
Insulation class		H								
Compliance with Low Voltage Directive		LVD 73/23/EC (2006/95/EC), 2004/108/EC								
Coil weight	kg *[lbs]*	1.05 *[2.3]*								
Voltage	V	12	13	24	27					
Type of voltage DC=continous current		DC	DC	DC	DC					
Power consumption	W	44	44	44	44					
Current (nominal at 20°C *[68°F]*)	A	3.6	3.4	1.8	1.6					
Resistance (nominal at 20°C *[68°F]*)	Ω	3.2	3.6	12.8	16.8					

	Volts	Connections	Model	Marking on coil	Coil code
=OB 01	12 DC	EN 175301-803 (Ex. DIN 43650)	C6501 12DC	12 DC	R933000100
=OB 03	12 DC	AMP JUNIOR	C6503 12DC	12 DC	R933000119
=OB 07	12 DC	DEUTSCH DT 04-2P	C6507 12DC	12 DC	R933000107
=AD 01	13 DC	EN 175301-803 (Ex. DIN 43650)	C6501 13DC	13 DC	R933000101
=AD 07	13 DC	DEUTSCH DT 04-2P	C6507 13DC	13 DC	R933000112
=OC 01	24 DC	EN 175301-803 (Ex. DIN 43650)	C6501 24DC	24 DC	R933000102
=OC 03	24 DC	AMP JUNIOR	C6503 24DC	24 DC	R933000120
=OC 07	24 DC	DEUTSCH DT 04-2P	C6507 24DC	24 DC	R933000111
=AC 01	27 DC	EN 175301-803 (Ex. DIN 43650)	C6501 27DC	27 DC	R933000103
=AC 07	27 DC	DEUTSCH DT 04-2P	C6507 27DC	27 DC	R933000113

Characteristic curves

Measured with hydraulic fluid ISO-VG32 at 45° ± 5° C *[113° ± 9° F]*; ambient temperature 20° C *[68° F]*.

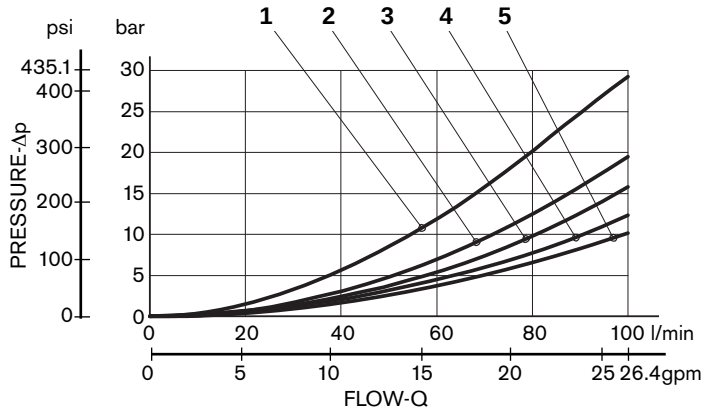

Schema	N° Curva				
	P>T	P>A	P>B	A>T	B>T
A201,A301,A401	2	1	1	1	1
B201,B301,B401		4	4	3	3
C201,C301,C401	5	5	5	3	3
B201, B301, B401, B361, E201,E301,E401		4	4	3	3
X301,Y301,X401,Y401		5	4	4	3

Performances limits

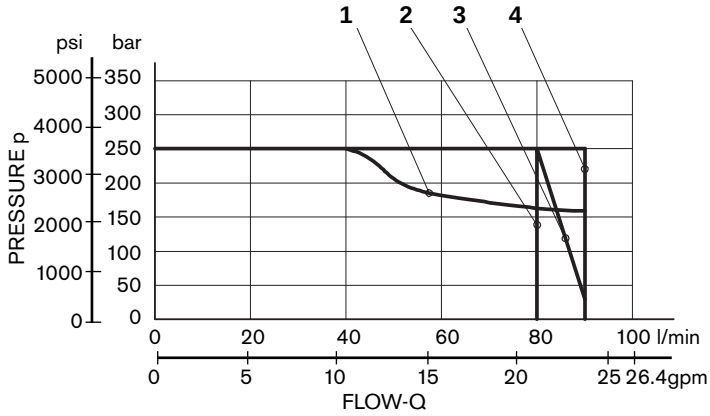

SCHEMA	N° Curva
E201, E301, E401	1
A201, A301, A401	2
X301, Y301, X401, Y401	3
B201, B301, B401, C201, C301, C401	4

The performance curves are measured with flow going across and coming back, like P>A and B>T. With unequal IN and OUT flow, the actual total Δp can be considerably lower.

External Dimensions and fittings

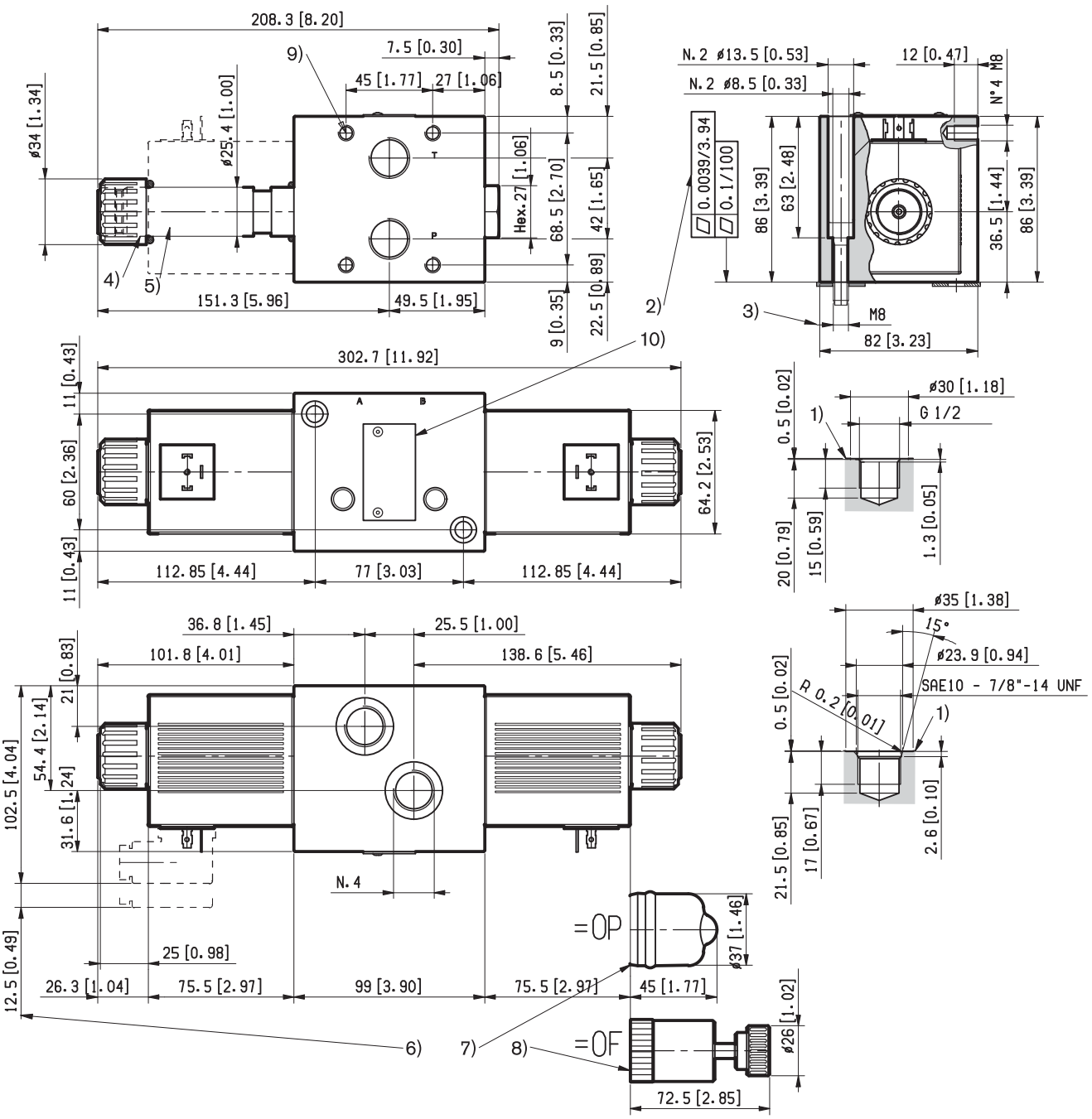

1 Work ports A, B, P, and T.

2 Flatness needed for mounting surface.

3 Two through installation holes reccomended screws M8 DIN 8.8: torque 20-22 Nm *[14.7-16.2 ft-lb]*. Must be ordered separately.

4 Ring nut for coil locking 34 mm dia. Torque 7-8 Nm *[5.2-5.9 ft-lb]*.

5 Solenoid tube Ø 25,4 mm *[1 inch]*.

6 Clearance needed for connector removal.

7 Optional push-button manual override for spool opening: it is pressure stuck to the ring nut for coil locking. Code R933003424.

8 Optional screw type manual override for spool opening: it is screwed (torque 6-7 *[4.4-5.2 ft-lb]*) to the tube as replacement of the coil ring nut. Code R933003713.

9 Four threaded holes M8 for fitting a secondary flangeable element on port A and B. Screws M8 with recommended strength class DIN 8.8: torque 20-22 Nm *[14.7-16.2 ft-lb]*.

10 Identification label.

Electric connections

=00

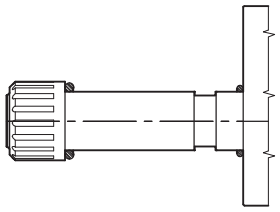

=01

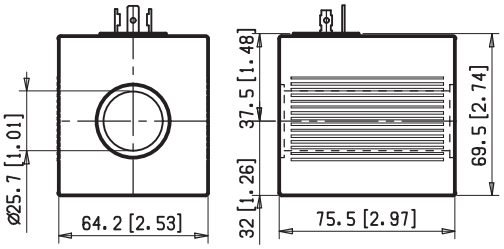

=03

Protection class: IP 65 with female connector properly fitted.

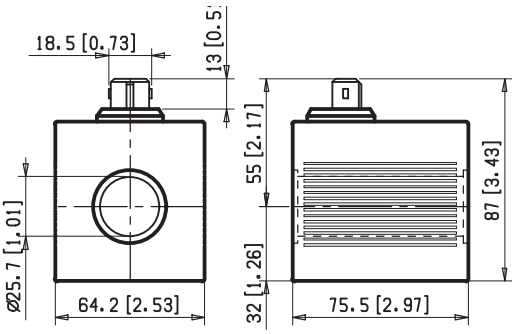

=07

Protection class: IP 69 K with female connector properly fitted.

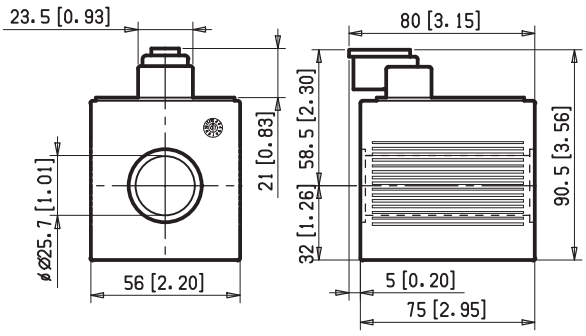

Bosch Rexroth Oil Control S.p.A.
Oleodinamica LC Division
Via Artigianale Sedrio, 12
42030 Vezzano sul Crostolo
Reggio Emilia - Italy
Tel. +39 0522 601 801
Fax +39 0522 606 226 / 601 802
compact-directional-valves@oilcontrol.com
www.boschrexroth.com

© This document, as well as the data, specifications and other information set forth in it, are the exclusive property of Bosch Rexroth Oil Control S.p.a.. It may not be reproduced or given to third parties without its consent.

The data specified above only serve to describe the product. No statements concerning a certain condition or suitability for a certain application can be derived from our information. The information given does not release the user from the obligation of own judgment and verification. It must be remembered that our products are subject to a natural process of wear and aging.

Subject to change.

Rexroth
Bosch Group

Stand alone 4/3, 4/2 solenoid operated directional valve FAN DRIVE

RE 18305-04/07.12 1/12
Replaces 07.11

LF...

LF1 Size 6
LF2 Size 10
Series 00
LF1 Maximum operating pressure 310 bar *[4500 psi]*
LF2 Maximum operating pressure 250 bar *[3600 psi]*
LF1 Maximum flow 60 l/min *[15.9 gpm]*
LF2 Maximum flow 90 l/min *[23.8 gpm]*
Ports G 3/8 - G1/2 - SAE 8 - SAE10

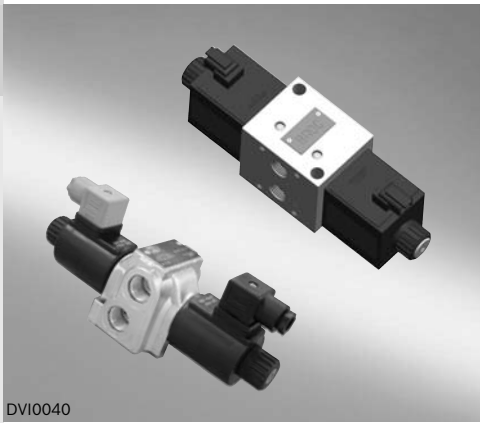
DVI0040

Summary

Description	Page
General specifications	1
Ordering details	2
Spool variants	3
Technical Data	3
Δp-Q_v characteristic curves for LF1	6
Performance limits for LF1	6
Δp-Q_v characteristic curves for LF2	7
Performance limits for LF2	8
External Dimensions and Fittings for LF1	9
External Dimensions and Fittings for LF2	10
Electric connections for LF1	11
Electric connections for LF2	12

General specifications

- 4 way, 3 position spool type solenoid operated directional valves which control or reverse the direction of the oil flow.
- Stand-alone valve body intended for “in-line” application. Available with a choice of threaded ports; mounting surface with installation holes for direct fitting on the machine structure.
- Zinc plated high strength cast iron body, with yellow trivalent chrome treatment.
- Wet pin tubes for DC coils, with push rod for mechanical override; nickel plated surface.
- Coils can be rotated 360° around the tube.
- Plug-in connectors available: EN 175301-803 (was DIN 43650); AMP Junior; DT04-2P (Deutsch), free leads.
- Coils fastened by ring nut: they are easily removable.
- Manual override (push button or lever type) available as option.

LF1 Ordering Details

L	F	1	_	2	_ _ _ _	_ _	_ _	_ _

Family
Directional Valve
Elements CDV

Type
Directional valve
4/3, 4/2

Size
6

Ports
G 3/8 = 3
3/4" - 16 UNF (SAE8) = C

Coil Type
C45 coil

Spool variants
4/3 operated on both sides a and b = _ 2 _ _
4/2 operated on side a only = _ 3 _ _

Optional fittings
00 = Standard
0P = Push button type manual override
0F = Screw type manual override

Electric connections
00 = Without coils
01** = With coils, without mating connector DIN EN 175301-803
03 = With coils, with bi-directional diode, without mating connector vertical Amp-Junior
07 = With coils, with bi-directional diode, without mating connector DT04-2P

Voltage supply

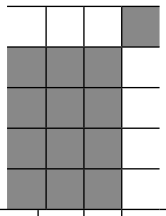

LF2 Ordering Details

L	F	2	_	_	_ _ _ _	_ _	_ _	_ _

Family
Directional Valve
Elements CDV

Type
Directional valve 4/3

Size
10

Ports
G 1/2 DIN 3852 = 2
7/8" - 14 UNF (SAE10) = D

Coil Type
C65DZL coil (24 W) = 0
C65DZ coil (44 W) = 1

Spool variants
4/3 operated on both sides a and b = _ 2 _ _
4/2 operated on side a only = _ 3 _ _

Optional fittings
00 = Standard
0P = Push button type manual override
0F = Screw type manual override

Electric connections[2)]
00 = Without coils
01** = With coils, without mating connector DIN EN 175301-803
03 = With coils, with bi-directional diode, without mating connector vertical Amp-Junior
07 = With coils, with bi-directional diode, without mating connector DT04-2P

Voltage supply[1)]

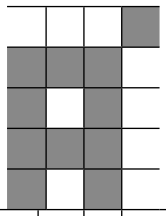

[1)] C65DZL coil (24 W) is only available as 12-24V DC version.
[2)] C65DZL coil (24 W) is available with AMP Junior and DEUTSCH DT 04-2P connectors.

** For connectors ordering code see data sheet RE 18325-90.

Spool variants

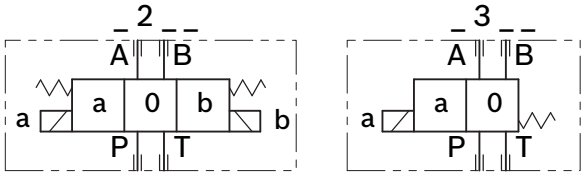

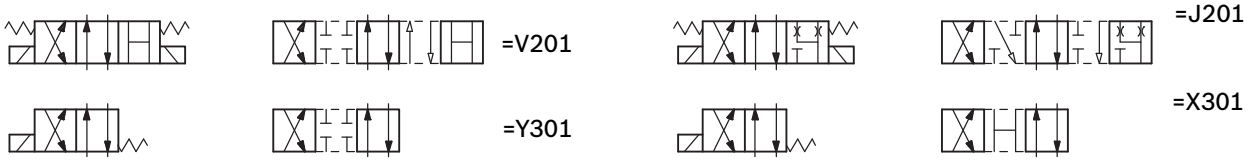

V201 for fixed displacement pumps
J201 for variable displacement pumps

Technical Data (for applications with different specifications consult us)

General

Valve element LF1 with 2 solenoids	kg *[lbs]*	2.23 *[4.92]*
Valve element LF2 with 2 solenoids	kg *[lbs]*	7.45 *[16.42]*
Mounting position		Unrestricted
Ambient Temperature	°C *[°F]*	–20....+50 *[-4....+122]* (NBR seals)

Hydraulic

Maximum pressure at P, A and B ports	bar *[psi]*	250 *[3600]*
Maximum pressure at T for LF1	bar *[psi]*	250 *[3600]*
Maximum pressure at T for LF2	bar *[psi]*	210 *[3045]*
Maximum flow for LF1	l/min *[gpm]*	60 *[16]*
Maximum flow for LF2	l/min *[gpm]*	90 *[24]*
Maximum flow for LF2 with spool **J201**	l/min *[gpm]*	80 *[21]*
Hydraulic fluid General properties: it must have physical lubricating and chemical properties suitable for use in hydraulic systems such as, for example:		Mineral oil based hydraulic fluids HL (DIN 51524 part 1). Mineral oil based hydraulic fluids HLP (DIN 51524 part 2). For use of environmentally acceptable fluids (vegetable or polyglycol base) please consult us.
Fluid Temperature	°C *[°F]*	-20....+80 *[-4....+176]* (NBR seals)
Permissible degree of fluid contamination		ISO 4572: $\beta_x \geq 75$ X=12...15 ISO 4406: class 20/18/15 NAS 1638: class 9
Viscosity range	mm^2/s	5....420

Electrical

Voltage type		DC								
Voltage tolerance (nominal voltage)	%	-10 .... +10								
Duty	%	Continuous, with ambient temperature ≤ 50°C *[122°F]*								
Coil wire temperature not to be exceeded	°C *[°F]*	150 *[302]*								
Response time	ms	ON 60 .... 95; OFF 25 70								
Maximum frequency	Hz	2								
Insulation class		H								
Compliance with		Low Voltage Directive LVD 73/23/EC (2006/95/EC), 2004/108/EC								
Current (nominal at 20°C *[68°F]*)	kg *[lbs]*	0.335 *[0.74]*								
Resistance (nominal at 20°C *[68°F]*)	kg *[lbs]*	1.05 *[2.3]*								
Coil for LF1										
Voltage	V	12	13	24	27					
Voltage type		DC	DC	DC	DC					
Power consumption	W	33	31	33	33					
Current (1)	A	2.8	2.4	1.4	1.2					
Resistance (2)	Ω	4.24	5.42	17	21.8					
Coil for LF2 C65 DZL type										
Voltage	V	12	24							
Voltage type		DC	DC							
Power consumption	W	24	24							
Current (nominal at 20°C *[68°F]*)	A	2	1							
Resistance (nominal at 20°C *[68°F]*)	Ω	5.99	23.71							
Coil for LF2 C65 DZ type										
Voltage	V	12	13	24	27					
Voltage type		DC	DC	DC	DC					
Power consumption	W	44	44	44	44					
Current (nominal at 20°C *[68°F]*)	A	3.6	3.4	1.8	1.6					
Resistance (nominal at 20°C *[68°F]*)	Ω	3.2	3.6	12.8	16.8					

Electrical coil for LF1

	Voltage (V)	Connector type	Code	Marking	Coil Mat no.
=OB 01	12 DC	EN 175301-803 (Ex. DIN 43650)	C4501 12DC	12 DC	R933000026
=OB 03	12 DC	AMP JUNIOR	C4503 12DC	12 DC	R933000027
=OB 07	12 DC	DEUTSCH DT 04-2P	C4507 12DC	12 DC	R933000030
=AD 01	13 DC	EN 175301-803 (Ex. DIN 43650)	C4501 13DC	13 DC	R933000028
=AD 03	13 DC	AMP JUNIOR	C4503 13DC	13 DC	R933000029
=AD 07	13 DC	DEUTSCH DT 04-2P	C4507 13DC	13 DC	R933000031
=OC 01	24 DC	EN 175301-803 (Ex. DIN 43650)	C4501 24DC	24 DC	R933000034
=OC 03	24 DC	AMP JUNIOR	C4503 24DC	24 DC	R933003630
=OC 07	24 DC	DEUTSCH DT 04-2P	C4507 24DC	24 DC	R933000032
=AC 01	27 DC	EN 175301-803 (Ex. DIN 43650)	C4501 27DC	27 DC	R933000035
=AC 03	27 DC	AMP JUNIOR	C4503 27DC	27 DC	R933000036
=AC 07	27 DC	DEUTSCH DT 04-2P	C4507 27DC	27 DC	R933000033

Electrical coil for LF2, C65 DZL (24 W) type

	Volts	Connections	Model	Marking on coil	Coil code
=OB 07	12 DC	DEUTSCH DT 04-2P	C6507 12DC	12 DC	R933000108
=OC 03	24 DC	AMP JUNIOR	C6503 24DC	24 DC	R933003182
=OC 07	24 DC	DEUTSCH DT 04-2P	C6507 24DC	24 DC	R933000109

Electrical coil for LF2, C65 DZ (44 W) type

	Volts	Connections	Model	Marking on coil	Coil code
=OB 01	12 DC	EN 175301-803 (Ex. DIN 43650)	C6501 12DC	12 DC	R933000100
=OB 03	12 DC	AMP JUNIOR	C6503 12DC	12 DC	R933000119
=OB 07	12 DC	DEUTSCH DT 04-2P	C6507 12DC	12 DC	R933000107
=AD 01	13 DC	EN 175301-803 (Ex. DIN 43650)	C6501 13DC	13 DC	R933000101
=AD 07	13 DC	DEUTSCH DT 04-2P	C6507 13DC	13 DC	R933000112
=OC 01	24 DC	EN 175301-803 (Ex. DIN 43650)	C6501 24DC	24 DC	R933000102
=OC 03	24 DC	AMP JUNIOR	C6503 24DC	24 DC	R933000120
=OC 07	24 DC	DEUTSCH DT 04-2P	C6507 24DC	24 DC	R933000111
=AC 01	27 DC	EN 175301-803 (Ex. DIN 43650)	C6501 27DC	27 DC	R933000103
=AC 07	27 DC	DEUTSCH DT 04-2P	C6507 27DC	27 DC	R933000113

Characteristic curves for LF1

Measured with hydraulic fluid ISO-VG32 at 45° ± 5° C *[113° ± 9° F]*; ambient temperature 20° C *[68° F]*.

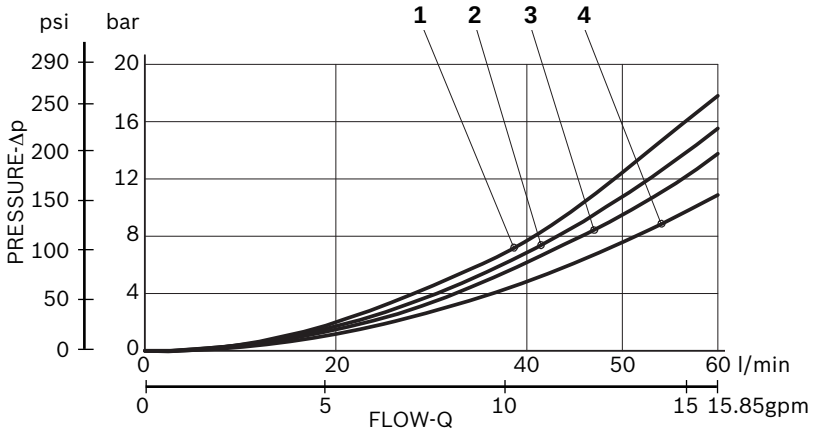

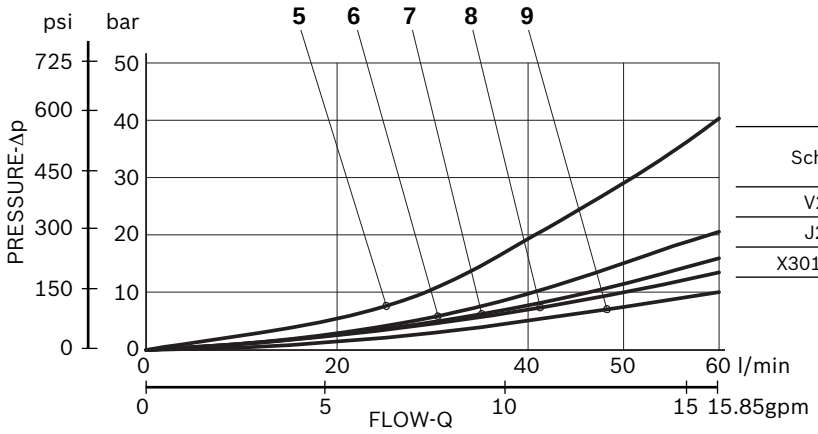

Scheme	Curve Nr.					
	P>T	P>A	P>B	A>T	B>T	A/B>T
V201	4	3	3	1	2	
J201		9	6	7	8	5
X301, Y301		10	10	11	11	

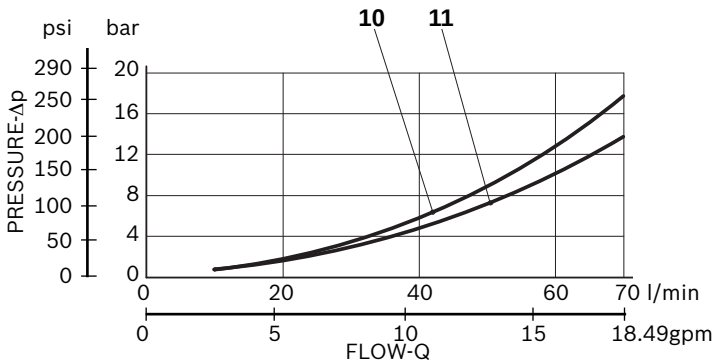

Performances limits for LF1

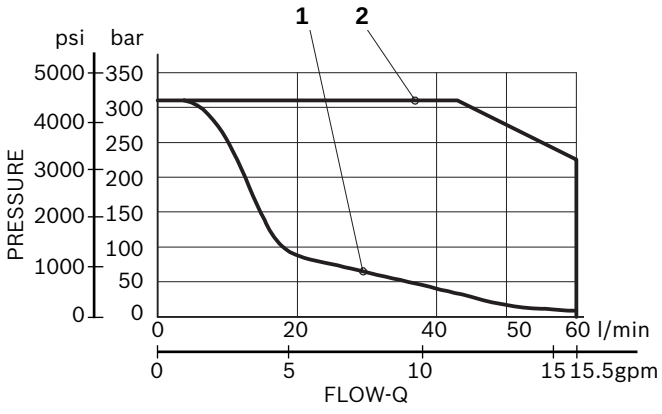

Scheme	Curve Nr.
V201, J201	1
X301, Y301	2

The performance curves are measured with flow going across and coming back, like P>A and B>T. With “lever type” emergency control, the performance limits are slightly lower.

Characteristic curves for LF2

Measured with hydraulic fluid ISO-VG32 at 45° ± 5° C *[113° ± 9° F]*; ambient temperature 20° C *[68° F]*.

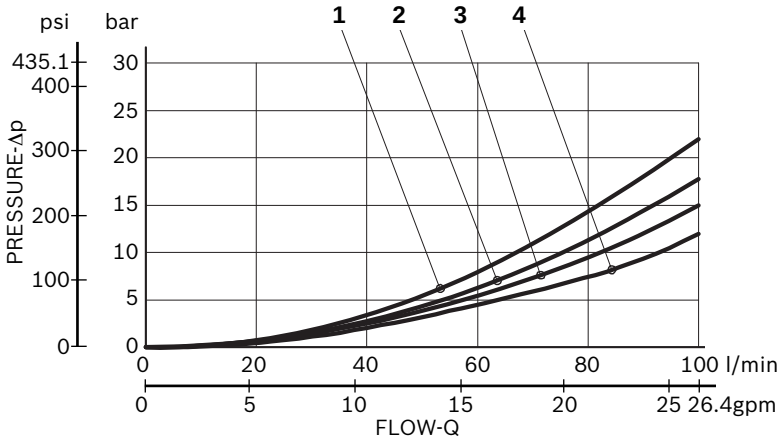

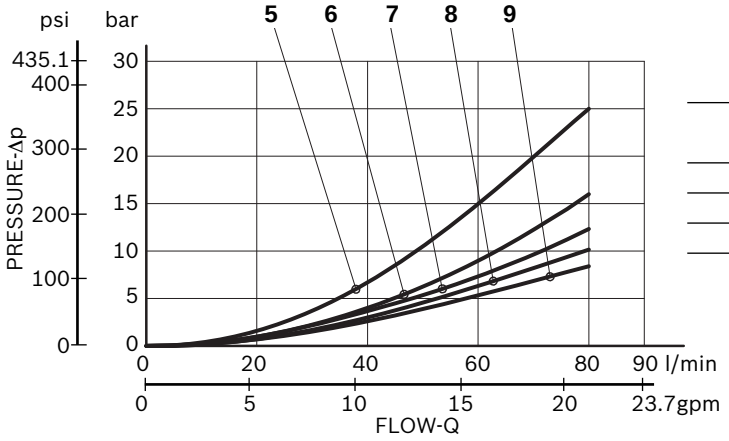

Schema	N° Curva					
	P>T	P>A	P>B	A>T	B>T	A/B>T
V201	3	4	2	1	3	
J201		9	7	6	8	5
X301, Y301		12	11	11	10	

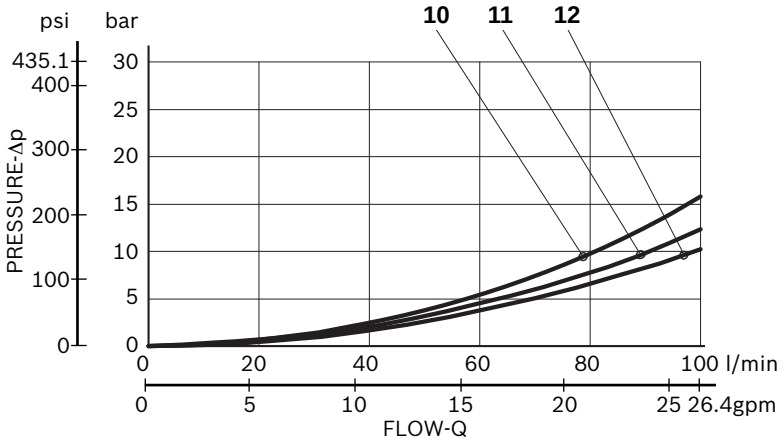

Performance limits for LF2 DZL (24W)

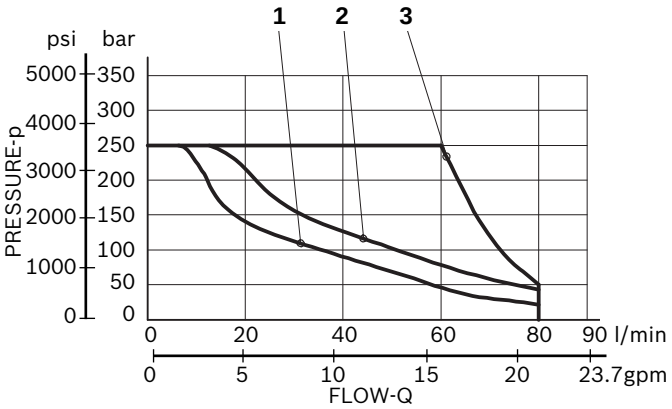

Scheme	Curve Nr.
V201, J201	1
X301	2
Y301	3

The performance curves are measured with flow going across and coming back, like P>A and B>T. With “lever type” emergency control, the performance limits are slightly lower.

Performance limits for LF2 DZ (44W)

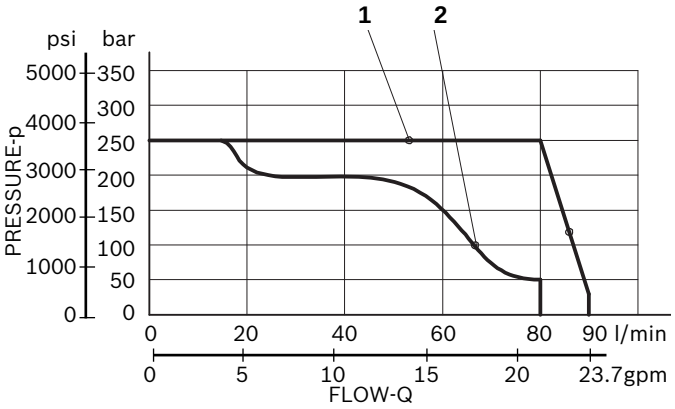

Scheme	Curve Nr.
V201, J201	1
X301, Y301	2

The performance curves are measured with flow going across and coming back, like P>A and B>T. With “lever type” emergency control, the performance limits are slightly lower.

External Dimensions and Fittings for LF1

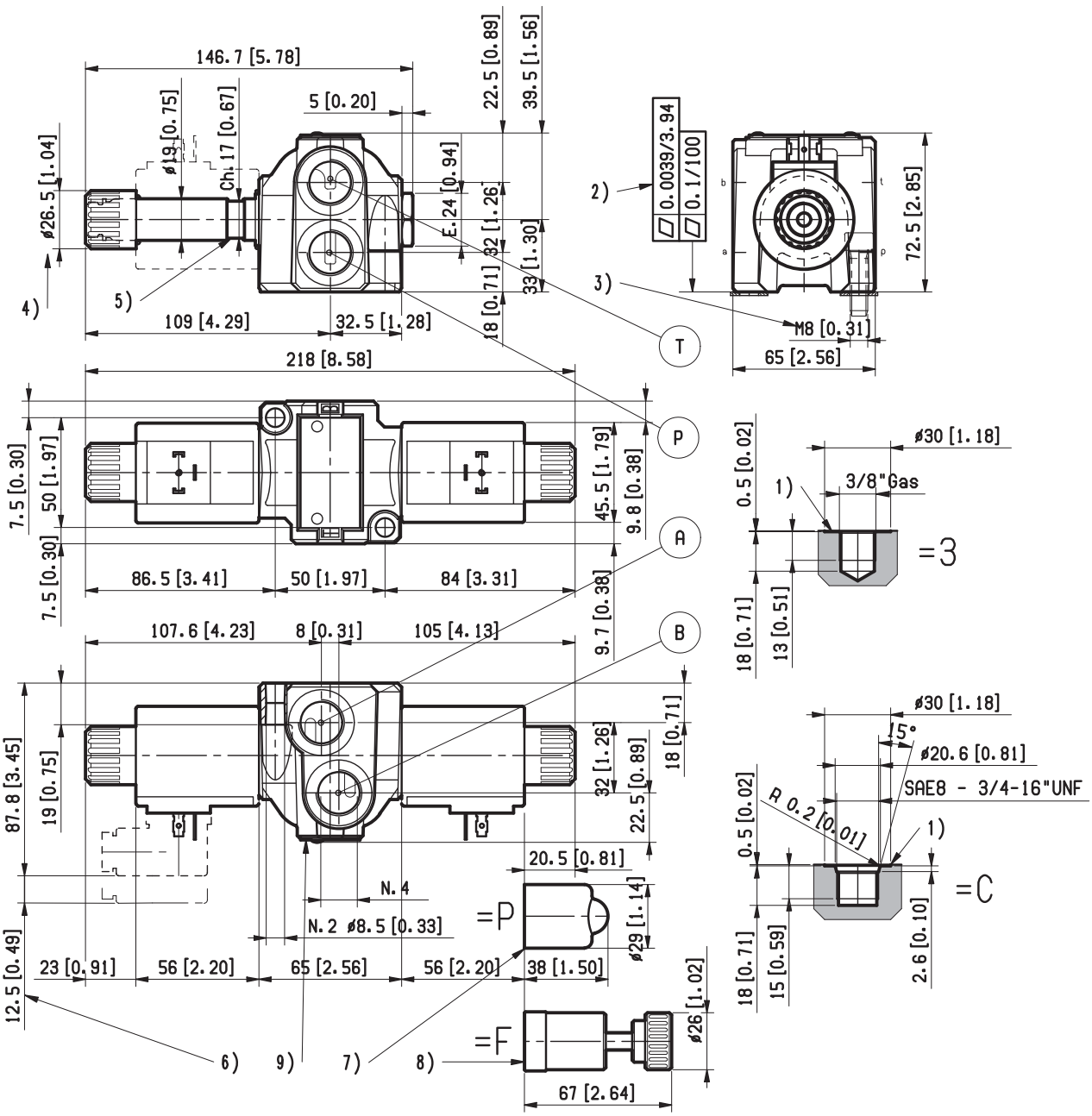

1 Work ports A, B, P, and T.

2 Flatness needed for mounting surface.

3 Two through installation holes reccomended screws M8 DIN 8.8: torque 20-22 Nm *[14.7-16.2 ft-lb]*. Must be ordered separately.

4 Ring nut for coil locking 26.5mm dia. Torque 3-4 Nm *[2.2-3 ft-lb]*.

5 Solenoid tube Ø 19 mm *[0.75 inch]*.

6 Clearance needed for connector removal.

7 Optional push-button manual override for spool opening: it is pressure stuck to the ring nut for coil locking. Mat no. R933000043.

8 Optional screw type manual override for spool opening: it is screwed (torque 6-7 *[4.4-5.2 ft-lb]*) to the tube as replacement of the coil ring nut. Mat no. R933007215.

9 Identification label.

10 Kit ring nut for coil locking with seals. Mat no. R933003529.

External Dimensions and Fittings for LF2

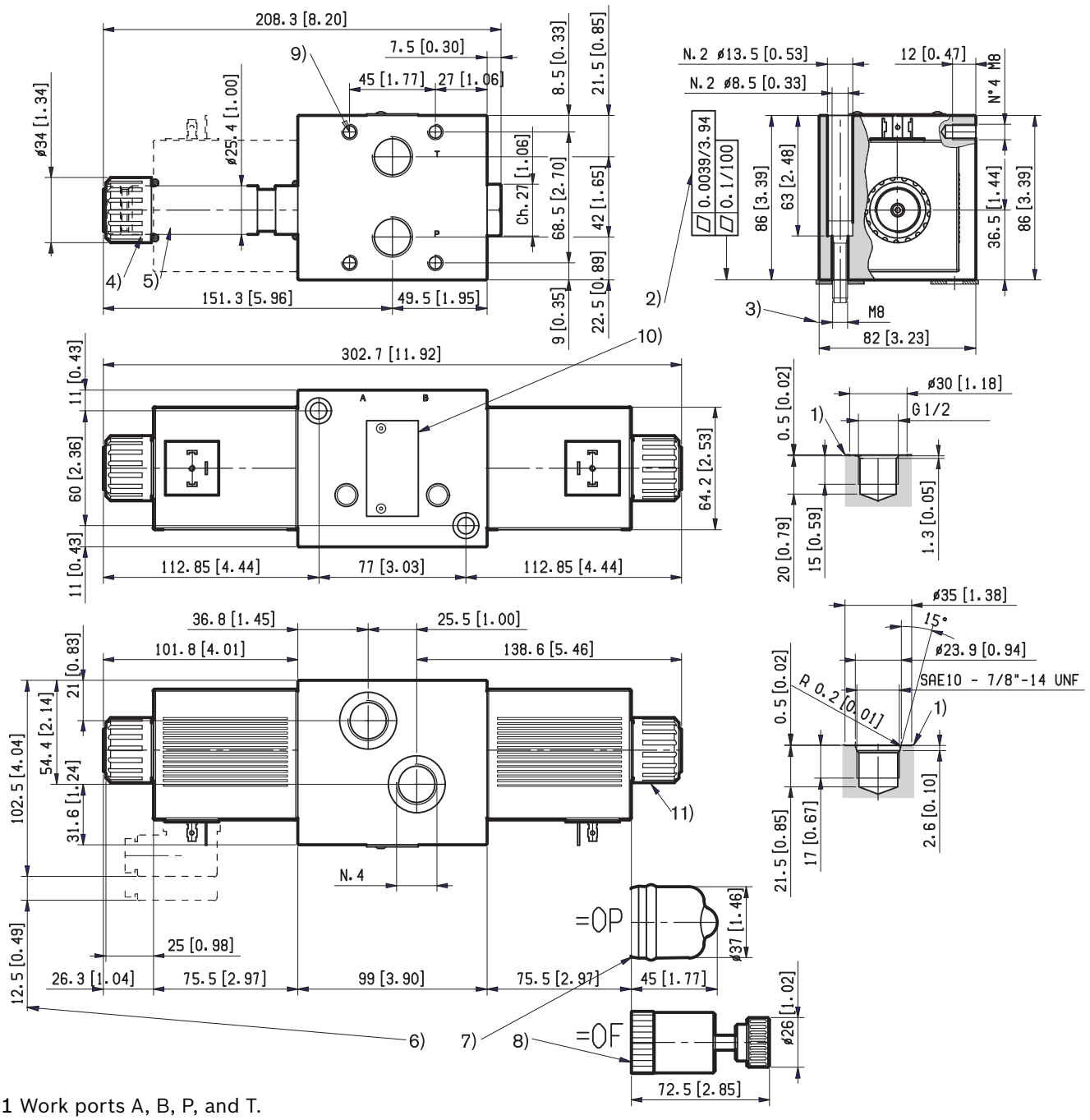

1 Work ports A, B, P, and T.

2 Flatness needed for mounting surface.

3 Two through installation holes reccomended screws M8 DIN 8.8: torque 20-22 Nm *[14.7-16.2 ft-lb]*. Must be ordered separately.

4 Ring nut for coil locking 34 mm dia. Torque 7-8 Nm *[5.2-5.9 ft-lb]*.

5 Solenoid tube Ø 25.4 mm *[1 inch]*.

6 Clearance needed for connector removal.

7 Optional push-button manual override for spool opening: it is pressure stuck to the ring nut for coil locking.
Mat no. R933003424.

8 Optional screw type manual override for spool opening: it is screwed (torque 6-7 *[4.4-5.2 ft-lb]*) to the tube as replacement of the coil ring nut.
Torque 6-7 Nm *[4.4-5.2 ft-lb]*. Mat no. R933003713.

9 Four threaded holes M8 for fitting a secondary flangeable element on port A and B. Screws M8 with recommended strength class DIN 8.8: torque 20-22 Nm *[14.7-16.2 ft-lb]*.

10 Identification label.

11 Kit ring nut for coil locking with seals.
Mat no. R933002879.

Electric connections for LF1

=00	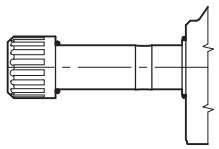	=01	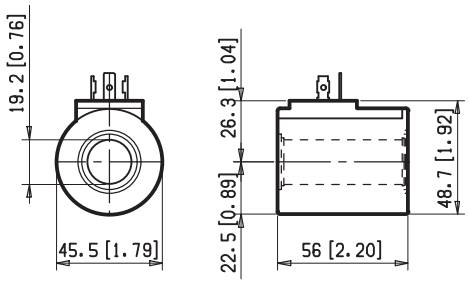
=03	Protection class: IP 65 with female connector properly fitted. 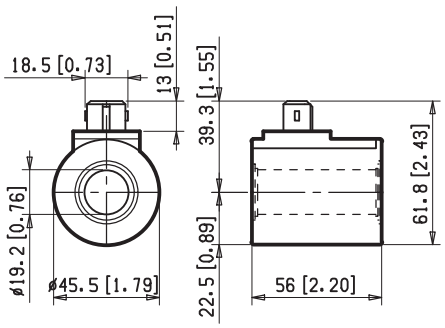	=07	Protection class: IP 69 K with female connector properly fitted. 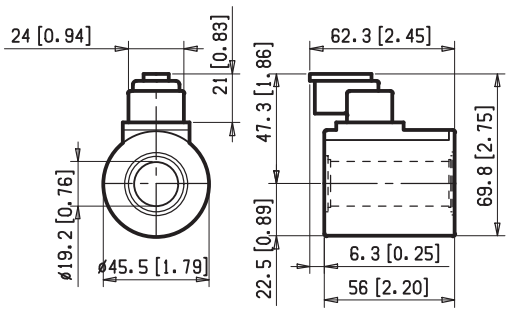

Electric connections for LF2

=00

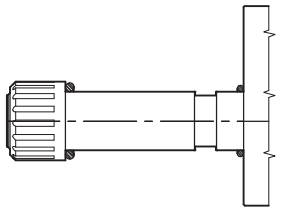

=01

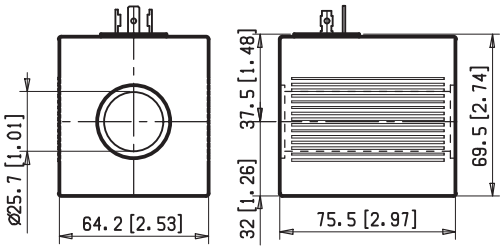

=03

Protection class: IP 65 with female connector properly fitted.

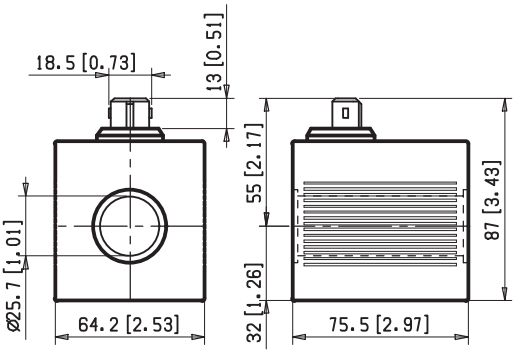

=07

Protection class: IP 69 K with female connector properly fitted

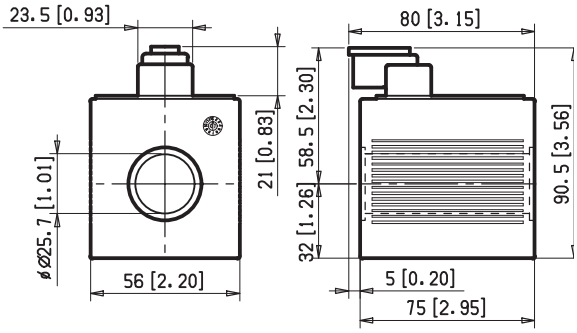

Bosch Rexroth Oil Control S.p.A.
Oleodinamica LC Division
Via Artigianale Sedrio, 12
42030 Vezzano sul Crostolo
Reggio Emilia - Italy
Tel. +39 0522 601 801
Fax +39 0522 606 226 / 601 802
compact-directional-valves@oilcontrol.com
www.boschrexroth.com

© This document, as well as the data, specifications and other information set forth in it, are the exclusive property of Bosch Rexroth Oil Control S.p.a.. It may not be reproduced or given to third parties without its consent.

The data specified above only serve to describe the product. No statements concerning a certain condition or suitability for a certain application can be derived from our information. The information given does not release the user from the obligation of own judgment and verification. It must be remembered that our products are subject to a natural process of wear and aging.

Subject to change.