UFI FILTERS HYDRAULIC DIVISION

CATALOGUE 2018/2019



UFI FILTERS
CHOSEN BY THE BEST

www.ufihyd.com



MISSION, VISION AND VALUES



UFI'S MISSION

UFI Filters' mission is to create innovative and sustainable solutions in filtration and thermal management systems. UFI Filters puts customers first and aims to provide them with exceptional quality products to enhance the efficiency of their applications.

UFI Filters believes in a business ethic of continuous improvement and mutual respect, which begins inside the Company and extends to customers and suppliers with equal importance.

UFI'S VISION

Be the trendsetter in the world of filtration, hydraulic applications included, and thermal management.

UFI'S VALUES

The "Values" of ethical conduct adopted by UFI Group and shared throughout its entire organization are:

INNOVATION
Being one step ahead

PASSION
Being driven by passion and heart

EXCELLENCE
Delivering superior results, so that we are always chosen by the best

INTEGRITY
Operating in adherence to moral and ethical principles

ACCOUNTABILITY
Achieving our goals respecting our values

DIVERSITY
Appreciating and valuing our differences

INDEX

12 **SUCTION FILTERS**



13 **CAL**

43 **FSE - AMF**
Qmax 75 l/min

56 **PRESSURE FILTERS**



57 **FPA - MDM**
Pmax 11 MPa
Qmax 50 l/min

97 **FPG - MDS**
Pmax 50 MPa
Qmax 400 l/min

130 **RETURN FILTERS**



131 **FRA - RFM**
Qmax 700 l/min

181 **FRG - RSC**
Qmax 2400 l/min

198 **OFF-LINE FILTERS**



199 **FOF - ROL**
Pmax 10 MPa
Qmax 1500 l/min



15 **ESA - ESB**
Qmax 600 l/min

21 **FMA - LFM**
Pmax 7 MPa
Qmax 600 l/min

27 **FSC - FSB**
Qmax 500 l/min

35 **FSD - MSE**
Qmax 700 l/min

51 **FSG - FAC**
Qmax 70 l/min

63 **FPB - MHT**
Pmax 42 MPa
Qmax 450 l/min

73 **FPC**
Pmax 31,5 MPa
Qmax 120 l/min

79 **FPD - MDF**
Pmax 31,5 MPa
Qmax 400 l/min

87 **FPE - AMF - AMD**
Pmax 1,2 MPa
Qmax 300 l/min

103 **FPH - TLM**
Pmax 2 MPa
Qmax 400 l/min

111 **FPL - SPP**
Pmax 31,5 MPa
Qmax 400 l/min

123 **FPM - SPM**
Pmax 21 MPa
Qmax 120 l/min

141 **FRB - RFA**
Qmax 140 l/min

147 **FRC - MAR**
Qmax 200 l/min

155 **FRD - MRH**
Qmax 1500 l/min

163 **FRF - RFC**
Qmax 2200 l/min

189 **FRH**
Qmax 200 l/min

207 **UOW - GTC**
Qmax 40 l/min

211 **HYDRO-DRY**

INDEX

214 **TRANSMISSION FILTERS**



215 **FTA - FTB - KTS**
Pmax 10 MPa
Qmax 240 l/min

224 **AIR FILTERS**



225 **CBA - TM**
Qmax 750 l/min

235 **CBF - FA**
Qmax 4000 l/min

244 **ACCESSORIES**



245 **CFA - TM**

256 **CLOGGING INDICATORS**





227 **CBB - FA**
Qmax 500 l/min

229 **CBC - TSP**
Qmax 1800 l/min

231 **CBD - FA**
Qmax 1500 l/min

233 **CBE - FA**
Qmax 20000 l/min

237 **CBS - SAB**
Qmax 2800 l/min

239 **CSE - SBB**
Qmax 2800 l/min

241 **AIR SENTRY**

249 **CLA - LS**

251 **CLB - LME**

253 **FAB**

268 **FILTRATION IN BRIEF**

GLOBAL PRESENCE



Headquarter

Hydraulic Production & Sales

Hydraulic Sales

UFI GROUP

HEADQUARTER
- UFI Filters S.p.A. Nogarole Rocca (IT)

14 PRODUCTION SITES
- UFI Filters S.p.A. (IT)
- Planet Filters S.p.A. (IT)
- Plastic Technologies S.p.A. (IT)
- UFI Filters Czech s.r.o. (CZ)
- Sofima Filters S.A (TN)
- UFI Filters do Brasil LTDA (BR)
- UFI Filters India Pvt. Ltd (Belgaum, IN)
- UFI Filters India Pvt. Ltd (Delhi, IN)
- Sofima Automotive Filter Shanghai Co, Ltd (CN)
- UFI Filters Shanghai Co, Ltd. (CN)
- Sofima Industrial Filter Shanghai Co, Ltd (CN)
- Sofima Automotive Filter Changchun Co, Ltd (CN)
- Sofima Trading Shanghai Co, Ltd (CN)
- UFI Filters Korea Co, Ltd. (KR)

OPENING SOON
4 PRODUCTION SITES
- UFI Filters Poland (PL)
- UFI Filters Chongqing (CN)
- UFI Filters Mexico (MX)
- UFI Filters Aftermarket India (IN)

3 INNOVATION CENTERS
- UFI Innovation Center S.r.l. (IT)
- UFI Innovation Center India Pvt. Ltd (IN)
- UFI Filters Shanghai Co, Ltd (CN)

54 COMMERCIAL OFFICES

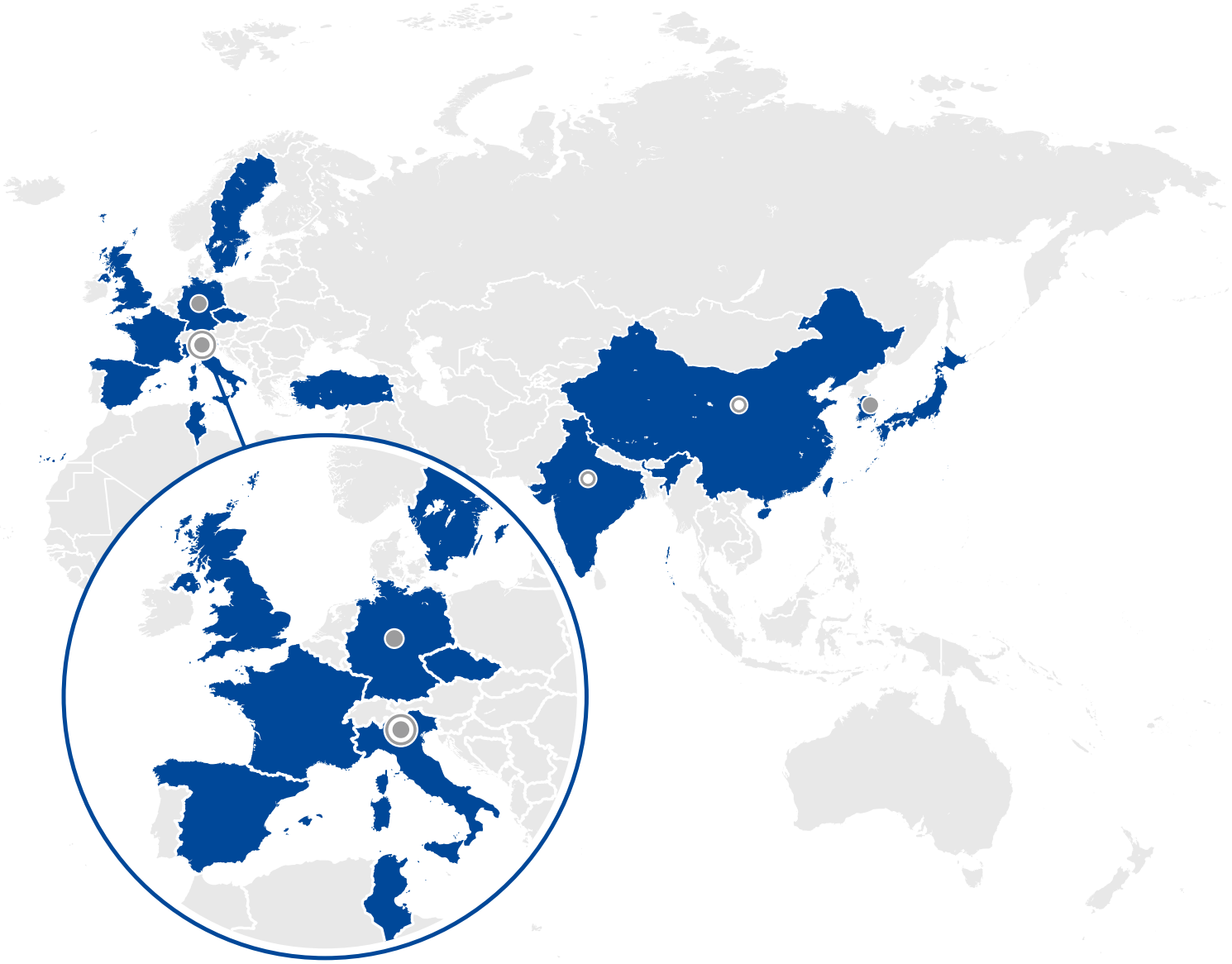

HYDRAULIC DIVISION

HEADQUARTER
- UFI Filters S.p.A.
  Nogarole Rocca (IT)

3 PRODUCTION SITES & SALES
- Planet Filters S.p.A. (IT)
- UFI Filters India (IN)
- Sofima Industrial Filter Shanghai Co, Ltd (CN)

1 INNOVATION CENTER
- UFI Innovation Center S.r.l. (IT)

4 COMMERCIAL OFFICES
- Saarbrucken (DE)
- UFI Filters United States (US)
- UFI Filters do Brasil LTDA (BR)
- UFI Filters Korea Co, Ltd. (KR)

A WINNING GROUP



A SUCCESS STORY SINCE 1971

UFI Filters, was founded in Nogarole Rocca, in Italy, in 1971 as a supplier of filtration systems for the automotive market. Some 10 years later, the Sofima brand was created to exploit the distribution potential in the Italian aftermarket. At the same time, the company began working with the most important Formula 1 teams, becoming a supplier of specific, tailor-made solutions guaranteeing top performance and taking the teams to the top of the championships.

In the 1990s, thanks to the vision and growth goals of its owners, UFI Filters began to expand its boundaries into new product development and new world markets.

In 1992, Planet Filters S.p.A. was established in Bolgare, near Bergamo, starting production of filtration solutions with the brands of UFI Hydraulic Division and SOFIMA Hydraulic Division for the hydraulic sector.

In 1996, being the first European filtration company to enter the Chinese market, UFI opened the first of its now four plants in China.

The late '90s was a time of notable growth, with the company winning over car manufacturers with fuel filters that guaranteed the separation of water from diesel.

At the start of the new millennium, it became a supplier to the demanding German car manufacturers, providing not only fuel but also oil and air modules, and thus reinforcing its reputation as a global Original Equipment supplier to the world's leading car manufacturers. In 2010, UFI entered the world of heat exchangers, specializing in the design, development and production of vacuum-brazed aluminium water-cooled heat exchangers. Today, 6 of the 7 biggest automotive groups in the world work with UFI to develop complete filtration and lubrication systems.

The results obtained by the company can be attributed to the constant investment in research and development (over 5% of turnover), allowing UFI to come up with innovative, exclusive solutions for its customers. Over the years, UFI has registered 167 patents.

The UFI Innovation Centers in Italy, India and China are equipped with sophisticated, advanced research and analysis tools for developing new products and filtration materials. UFI Filters now has over 4000 employees at 14 production sites, 3 innovation centers and 54 commercial offices.

THE GROUP BY NUMBERS

1971

Founded in 1971, it's now a world leader in filtration technology and thermal management.

10

10 application sectors: from automotive (LV/HD), industry and hydraulics to special applications.

4.000

14 production plants and over 4,000 employees in 16 countries worldwide.

F1

Present everywhere, from F1 cars to the ExoMars spacecraft.

95%

95% of vehicles manufacturers worldwide choose UFI Filters.

120

120 specialised technicians in the innovation and development centers in Italy and China.

167

167 patents at international level.

5%

5% of turnover reinvested in R&D.

6

6 lines of filters supplied: air, oil, fuel, cabin air, hydraulics and transmission.

150

150 co-branded products with the biggest OEM's.

HYDRAULIC DIVISION



MOBILE HYDRAULIC APPLICATIONS

The supply of reliable hydraulic power to vehicles serving the arduous requirements of the construction industry safeguards vehicle utilization and productivity levels and avoids the expensive, time-consuming issues associated with un-planned downtime, maintenance and repair.

When properly protected against contamination, the components of the hydraulic-circuit enable vehicle fluidpower systems to achieve incredible displays of power and agility in a vast array of applications and working environments. For this reason, Filtration Quality is essential as most hydraulic failures are a result of particulate contamination.

UFI Hydraulic Division has the knowledge and engineering technology to confront and master these issues with a proven range of filtration products for the mobile customer. Many well-known construction-vehicle manufacturers and end users have placed their trust in UFI's ability for many years, both in Original Equipment and in Aftermarket.

STATIONARY HYDRAULIC APPLICATIONS

Backed by its recognized Industrial pedigree, UFI Hydraulic Division has earned a solid reputation for quality and cost-efficient products also for CNC machines, presses, windmill applications and industrial hydraulic systems.

UFI Hydraulic Division filters meet the hydraulic-system requirements of maximum protection, with high efficiency and constant stability.

High-performance micro-fibre filtration media, with high voids-volume, warrants validated levels of dirt-holding capacity, coherent with the economic extended machine-life service-intervals demanded by the market. There is no evidence that oil can exceed a certain level of cleanliness and therefore Filtration Quality should be as efficient as space, costs and pressure-drop will allow.



NUMBERS AND SECTORS

1992

Founded in 1992, it's now a world leader in hydraulic technology.

6

6 application sectors: from heavy duty, industry and power generation to special applications.

150

3 production plants and over 150 employees in 6 countries worldwide.

6

6 lines of filter supplied: suction, return, pressure, off-line, trasmissions, air.

HEAVY DUTY

Trucks, buses, road building machines etc.

AGRICULTURAL

Tractors, combined harvesters, mixers, sprayers etc.

CONSTRUCTION

Excavators, backhoe loaders, dumpers, telehandlers etc.

POWER GENERATION

Windmills, genset, oil & gas etc.

MATERIAL HANDLING

Forklifts, port machining, vertical lifts etc.

INDUSTRIAL

Primary metal, ceramic presses, plastic presses, etc.



SUCTION FILTERS

OPTIMAL PROTECTION OF YOUR PUMP

Application:
Suction filters are required for general purpose coarse filtration protection of the downstream hydraulic-pump.
Fine filtration at this point in the hydraulic circuit is not recommended to avoid pump-cavitation.

User Benefits:
Suction filters represent the “first-line” filtration and are used to:

- avoid the ingress of contamination into the hydraulic circuit
- prolong the lifetime of finer downstream filtration
- reduce the particulate-load on the finer filter, thus extending service-life-intervals, unplanned downtime and maintenance
- avoid damage to the finer downstream filter from coarse particulate, such as rust.

The overall consequence of effective “first-line” suction filtration is a reduction in the Kwh running costs of the hydraulic-pump.

CAL
SUCTION FILTERS



MATERIALS

Housing: Zinc plated steel

FLOW RATE

Up to 100 l/min

WORKING TEMPERATURE

From -25° to +110° C

COMPATIBILITY (ISO 2943)

Full with fluids: HH-HL-HM-HV-HTG
(according to ISO 6743/4)
For fluids different than the above mentioned, please contact our Customer Service.



HYDRAULIC DIAGRAM

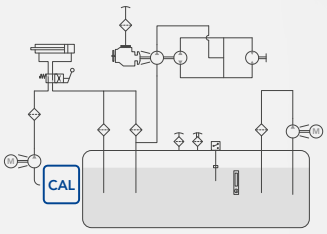

Is this datasheet the latest release? Please check on our website.

CAL
SUCTION FILTERS

INSTALLATION DRAWING

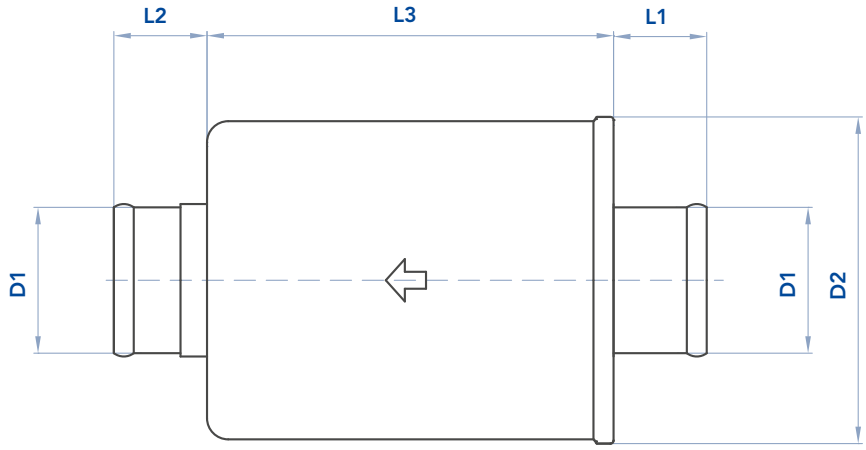

FILTER HOUSING

UFI Code	Old Sofima Code	Nominal Flow Rate l/min	Filter Media	D1	D2	L1	L2	L3	kg
CAL305MQ	CAL305MC	40	Wire mesh 160 µm	30	72	23	23	100	0,35
CAL355MQ	CAL355MC	45	Wire mesh 160 µm	35	80	22	22	96	0,35
CAL385MQ	CAL385MC	65	Wire mesh 160 µm	38	72	23	23	100	0,35
CAL387MQ	CAL387MC	85	Wire mesh 160 µm	38	72	23	23	160	0,40
CAL455MQ	CAL455MC	100	Wire mesh 160 µm	45	100	32	42	139	0,65

PRESSURE DROP CURVES (ΔP)

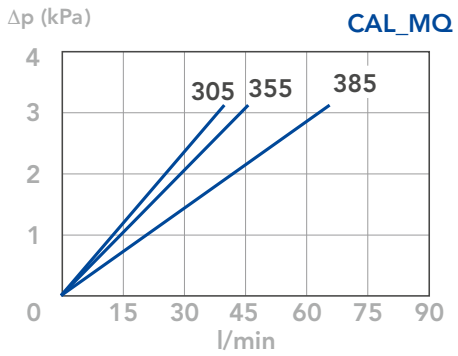

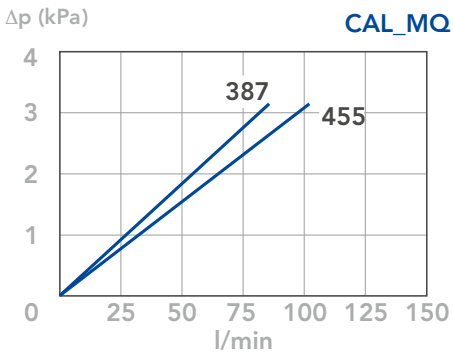

N.B.

The references fluid has a kinematic viscosity 30 cSt and specific gravity 0,86 kg/dm3.

For different oil viscosity please contact our Customer Service for further information.

ESA-ESB
SUCTION FILTERS



MATERIALS

Connector: Polyammide (Aluminium for ESA & ESB 51 - 52)
End cap: Polyammide (Zinc plated steel for ESA & ESB 51 - 52)
Bypass valve: (ESA) Polyammide
Magnetic core: (ESB) Syntherized magnetic material

PRESSURE

Collapse, differential: 100 kPa (1 bar)

BYPASS VALVE

Setting: 30 kPa (0,3 bar) ± 10%

WORKING TEMPERATURE

From -25° to +110° C

COMPATIBILITY (ISO 2943)

Full with fluids: HH-HL-HM-HR-HV-HTG
(according to ISO 6743/4)
For fluids different than the above mentioned,
please contact our Customer Service.

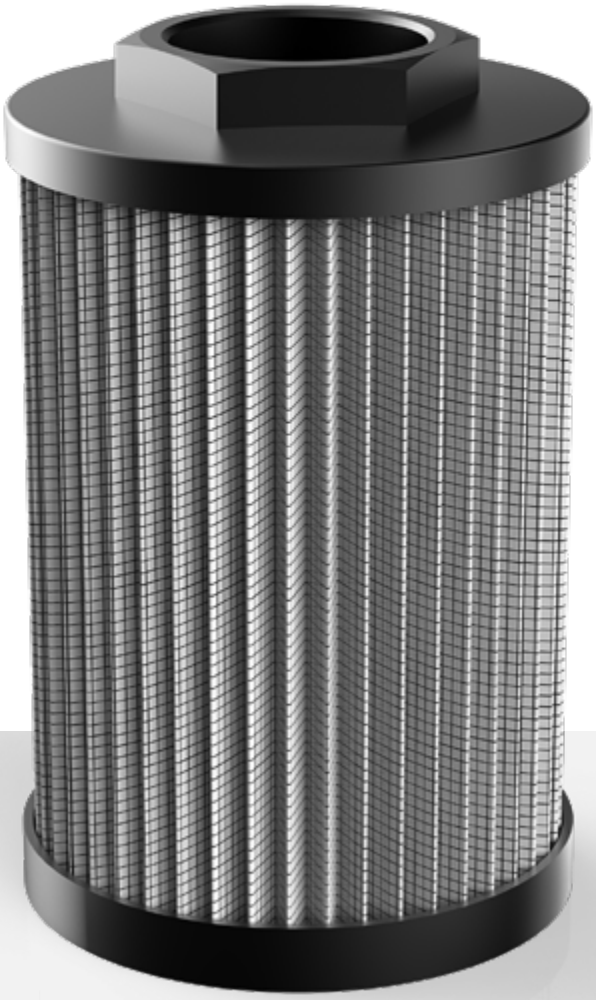

HYDRAULIC DIAGRAM

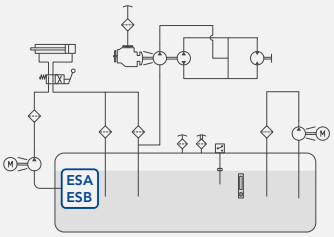

Is this datasheet the latest release? Please check on our website.



ESA
SUCTION FILTERS

ORDERING AND OPTION CHART

E	S	A	FILTER ELEMENT FAMILY											
			SIZE & LENGHT	**11**	**21**	**22**	**30**	**31**	**32**	**40**	**41**	**42**	**43**	**51**	**52**
			PORT TYPE												
			B = BSP thread	B	B	B	B	B	B	B	B	B	B	B	B
			N = NPT thread *	N	N	N	N	N	N	N	N	N	N	-	-
			PORT SIZE												
			03 = 3/8"	03	-	-	-	-	-	-	-	-	-	-	-
			04 = 1/2"	04	04	-	-	-	-	-	-	-	-	-	-
			06 = 3/4"	-	06	06	-	-	-	-	-	-	-	-	-
			08 = 1"	-	-	08	-	-	-	-	-	-	-	-	-
			10 = 1" 1/4	-	-	-	10	10	10	-	-	-	-	-	-
			12 = 1" 1/2	-	-	-	12	12	12	12	12	-	-	-	-
			16 = 2"	-	-	-	-	-	16	16	16	16	-	-	-
			20= 2" 1/2	-	-	-	-	-	-	-	-	20	-	-	-
			24 = 3"	-	-	-	-	-	-	-	-	24	24	-	-
			28 = 3" 1/2	-	-	-	-	-	-	-	-	-	-	28	-
			32 =4"	-	-	-	-	-	-	-	-	-	-	-	32
			BYPASS VALVE												
			W = without	W	W	W	W	W	W	W	W	W	W	W	W
			A =30 kPa (0,3 bar)	A	A	A	A	A	A	A	A	A	A	A	A
			FILTER MEDIA												
			ME = metal wire mesh 60 µm	ME	ME	ME	ME	ME	ME	ME	ME	ME	ME	ME	ME
			MF = metal wire mesh 90 µm	MF	MF	MF	MF	MF	MF	MF	MF	MF	MF	MF	MF
			MG = metal wire mesh 250 µm	MG	MG	MG	MG	MG	MG	MG	MG	MG	MG	MG	MG

MAINTENANCE

The best time to change your filter element is just before it reaches its maximum dirt-holding capacity. When it is time to change the filter element, switch off the system before opening the tank.
Remove the dirty filter element and replace it with an original UFI element, verifying the part number on the filter cap or on the catalogue.
Close the tank.
We recommend the stocking of a spare UFI filter element for timely replacement when required.



ESB
SUCTION FILTERS

ORDERING AND OPTION CHART

E	S	B	FILTER ELEMENT FAMILY											
			SIZE & LENGHT	**11**	**21**	**22**	**30**	**31**	**32**	**40**	**41**	**42**	**43**	**51**	**52**
			PORT TYPE												
			B = BSP thread	B	B	B	B	B	B	B	B	B	B	B	B
			N = NPT thread *	N	N	N	N	N	N	N	N	N	N	-	-
			PORT SIZE												
			03 = 3/8"	03	-	-	-	-	-	-	-	-	-	-	-
			04 = 1/2"	04	04	-	-	-	-	-	-	-	-	-	-
			06 = 3/4"	-	06	06	-	-	-	-	-	-	-	-	-
			08 = 1"	-	-	08	-	-	-	-	-	-	-	-	-
			10 = 1" 1/4	-	-	-	10	10	10	-	-	-	-	-	-
			12 = 1" 1/2	-	-	-	12	12	12	12	12	-	-	-	-
			16 = 2"	-	-	-	-	-	16	16	16	16	-	-	-
			20= 2" 1/2	-	-	-	-	-	-	-	-	20	-	-	-
			24 = 3"	-	-	-	-	-	-	-	-	24	24	-	-
			28 = 3" 1/2	-	-	-	-	-	-	-	-	-	-	28	-
			32 =4"	-	-	-	-	-	-	-	-	-	-	-	32
			BYPASS VALVE												
			X = not available	X	X	X	X	X	X	X	X	X	X	X	X
			FILTER MEDIA												
			ME = metal wire mesh 60 µm	ME	ME	ME	ME	ME	ME	ME	ME	ME	ME	ME	ME
			MF = metal wire mesh 90 µm	MF	MF	MF	MF	MF	MF	MF	MF	MF	MF	MF	MF
			MG = metal wire mesh 250 µm	MG	MG	MG	MG	MG	MG	MG	MG	MG	MG	MG	MG

NOTE

The used filter elements cannot be cleaned and are classified as “Dangerous waste material”. They must be disposed according to local laws by authorized Companies.
Verify that the Company you choose has the expertise and authorization to dispose this type of waste material.

ESA
SUCTION FILTERS

INSTALLATION DRAWING

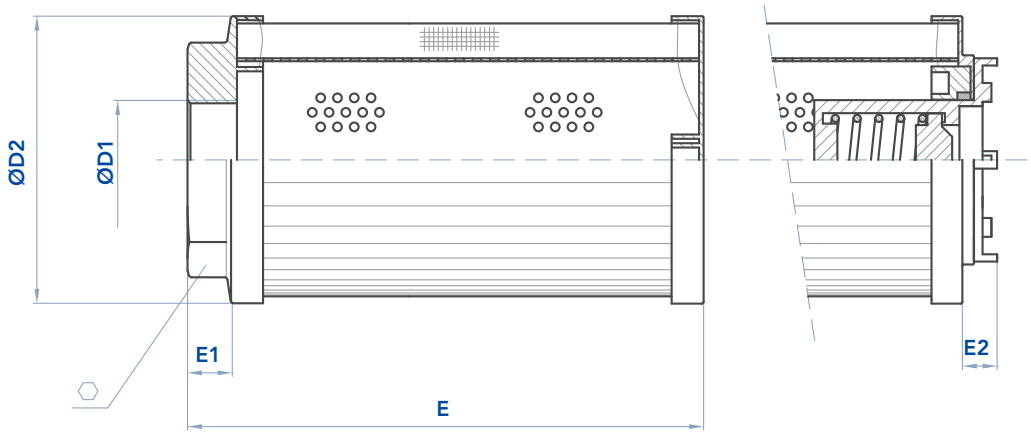

FILTER HOUSING

	D1	D2	E	E1	E2	⬡	kg
ESA11	3/8" -1/2"	52	73	12	13	30	0,05
ESA21	1/2" - 3/4"	70	92	13	11	42	0,25
ESA22	3/4" - 1"	70	137	13	11	42	0,25
ESA30	1"1/4 - 1"1/2	99	135	15	12	70	0,30
ESA31	1"1/4 - 1"1/2	99	178	15	12	70	0,40
ESA32	1"1/4 - 1"1/2 - 2"	99	218	15	12	70	0,50
ESA40	1"1/2 - 2"	130	160	15	15	70	0,50
ESA41	1"1/2 - 2"	130	201	15	15	70	0,70
ESA42	2" - 2"1/2 - 3"	130	253	15	25	101	1,00
ESA43	3"	130	330	15	25	101	1,30
ESA51	3"1/2	180	390	35	-	140	2,80
ESA52	4"	180	440	35	-	140	3,00



ESB
SUCTION FILTERS

INSTALLATION DRAWING

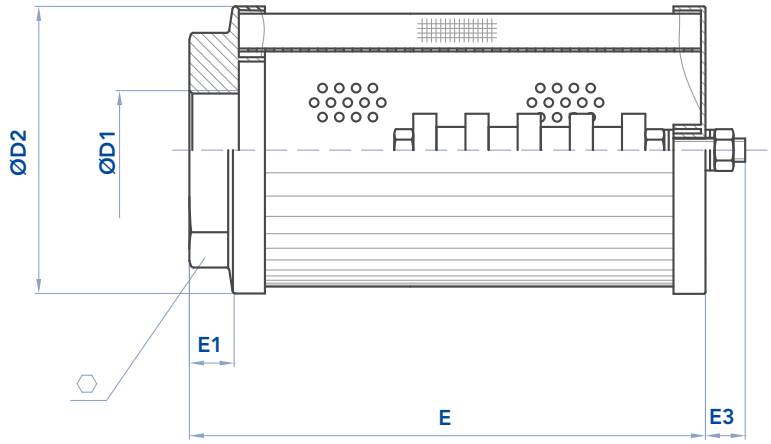

FILTER HOUSING

	D1	D2	E	E1	E3	⬡	kg
ESB11	3/8" -1/2"	52	73	12	9	30	0,10
ESB21	1/2" - 3/4"	70	92	13	12	42	0,30
ESB22	3/4" - 1"	70	137	13	13	42	0,30
ESB30	1"1/4 - 1"1/2	99	135	15	12	70	0,35
ESB31	1"1/4 - 1"1/2	99	178	15	12	70	0,45
ESB32	1"1/4 - 1"1/2 - 2"	99	218	15	14	70	0,60
ESB40	1"1/2 - 2"	130	160	15	14	70	0,60
ESB41	1"1/2 - 2"	130	201	15	14	70	0,80
ESB42	2" - 2"1/2 - 3"	130	253	15	14	101	1,20
ESB43	3"	130	330	15	14	101	1,50
ESB51	3"1/2	180	390	35	4	140	3,00
ESB52	4"	180	440	35	4	140	3,20

ESA-ESB
SUCTION FILTERS

MAINTENANCE

The best time to change your filter element is just before it reaches its maximum dirt-holding capacity. When it is time to change the filter element, switch off the system before opening the tank.
Remove the dirty filter element and replace it with an original UFI element, verifying the part number on the filter cap or on the catalogue.
Close the tank.
We recommend the stocking of a spare UFI filter element for timely replacement when required.

PRESSURE DROP CURVES (ΔP)

The Pressure Drop (Δp) must be lower than 3 kPa (0,03 bar).

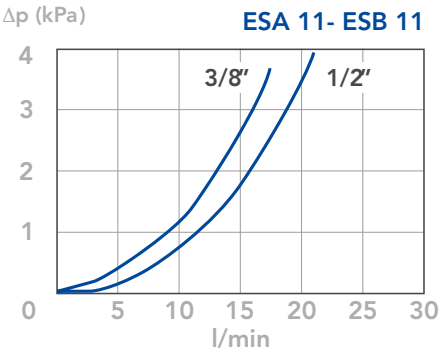

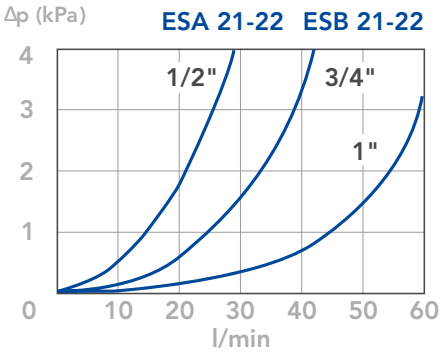

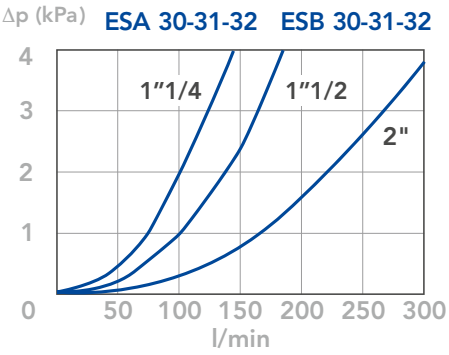

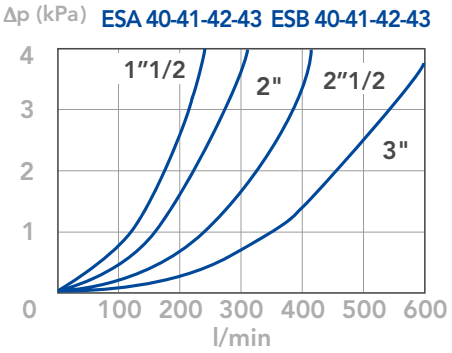

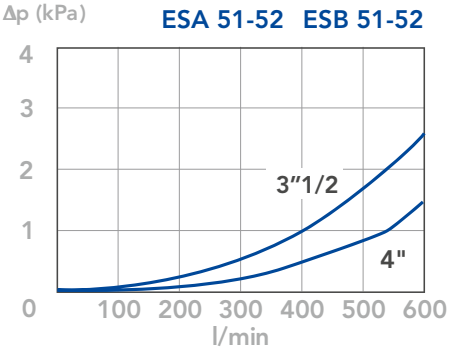

N.B.

All the curves have been obtained with mineral oil having a kinematic viscosity 30 cSt and specific gravity 0,86 kg/dm3; for fluids with different features, please consider the factors described in the first part of this catalogue. All the curves are obtained from test done at the UFI HYDRAULIC DIVISION Laboratory, according to the specification ISO 3968. In case of discrepancy, please check the contamination level, viscosity and features of the fluid in use.

FMA-LFM
SUCTION FILTERS

MATERIALS

Head: Aluminium alloy
Bowl: Cold formed steel
Seals: NBR Nitrile (FKM Fluoroelastomer - on request)
Indicator housing: Brass

PRESSURE

Max working: 0,7 MPa (7 bar)
Collapse, differential for the filter element (ISO 2941):
300 kPa (3 bar)

WORKING TEMPERATURE

From -25° to +110° C

COMPATIBILITY (ISO 2943)

Full with fluids: HH-HL-HM-HV-HTG
(according to ISO 6743/4)
For fluids different than the above mentioned,
please contact our Customer Service.



HYDRAULIC DIAGRAM

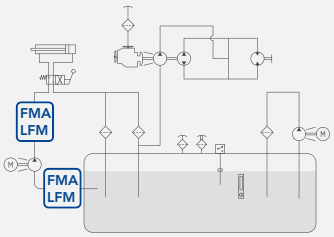

Is this datasheet the latest release? Please check on our website.



FMA
SUCTION FILTERS

ORDERING AND OPTION CHART

F	M	A	COMPLETE FILTER FAMILY						FILTER ELEMENT FAMILY	E	M	A
			SIZE & LENGHT	11	21	22	31	32	SIZE & LENGHT			
		B	PORT TYPE									
			B = BSP thread	B	B	B	B	B				
			PORT SIZE									
			03 = 3/8"	03	-	-	-	-				
			04 = 1/2"	04	-	-	-	-				
			06 = 3/4"	-	06	-	-	-				
			08 = 1"	-	-	08	-	-				
			10 = 1" 1/4	-	-	-	10	-				
			12 = 1" 1/2	-	-	-	-	12				
		X	BYPASS VALVE									
			X = not available	X	X	X	X	X				
			SEALS						SEALS			
			N = NBR Nitrile	N	N	N	N	N				
			F = FKM Fluoroelastomer	F	F	F	F	F				
			FILTER MEDIA						FILTER MEDIA			
			CC = impregnated cellulose 10 µm β>2	CC	CC	CC	CC	CC				
			CD = impregnated cellulose 25 µm β>2	CD	CD	CD	CD	CD				
			MD = metal wire mesh 25 µm	MD	MD	MD	MD	MD				
			ME = metal wire mesh 60 µm	ME	ME	ME	ME	ME				
			MF = metal wire mesh 90 µm	MF	MF	MF	MF	MF				
			MG = metal wire mesh 250 µm	MG	MG	MG	MG	MG				
			WR = water removal*	WR	WR	WR	WR	WR				
			CLOGGING INDICATOR									
			0E = nr. 2x1/8" ports, plugged	0E	0E	0E	0E	0E				
			11 = vacuum gauge**	11	11	11	11	11				
			91 = SPDT, vacuum switch**	91	91	91	91	91				
			33 = pressure gauge***	33	33	33	33	33				
			P1 = SPDT, pressure switch***	P1	P1	P1	P1	P1				
			ACCESSORIES									
			W = without accessory	W	W	W	W	W				
			B = mounting brackets	B	B	B	B	B				
		X	ACCESSORIES									
			X = no accessory available	X	X	X	X	X				

NOTES

* Water removal media - see “Hydro Dry” chapter
** For Suction line
*** For Return and Low Pressure line

LFM
SUCTION FILTERS

ORDERING AND OPTION CHART

L	F	M	COMPLETE FILTER FAMILY						FILTER ELEMENT FAMILY	C	L	E
			SIZE & LENGHT	010	050	070	120	180	SIZE & LENGHT			
			FILTER MEDIA						FILTER MEDIA			
			CD = impregnated cellulose 10 µm β>2	CD	CD	CD	CD	CD				
			CV = impregnated cellulose 25 µm β>2	CV	CV	CV	CV	CV				
			MV = metal wire mesh 25 µm	MV	MV	MV	MV	MV				
			MS = metal wire mesh 60 µm	MS	MS	MS	MS	MS				
			MN = metal wire mesh 90 µm	MN	MN	MN	MN	MN				
			DC = metal wire mesh 250 µm	DC	DC	DC	DC	DC				
			WR = water removal*	WR	WR	WR	WR	WR				
			SEALS						SEALS			
			1 = NBR Nitrile	1	1	1	1	1				
			2 = FKM Fluoroelastomer	2	2	2	2	2				
		0	BYPASS VALVE									
			0 = without	0	0	0	0	0				
		B	PORT TYPE									
			B = BSP thread	B	B	B	B	B				
			PORT SIZE									
			2 = 3/8"	2	-	-	-	-				
			3 = 1/2"	3	-	-	-	-				
			4 = 3/4"	-	4	-	-	-				
			5 = 1"	-	-	5	-	-				
			6 = 1" 1/4	-	-	-	6	-				
			7 = 1" 1/2	-	-	-	-	7				
			CLOGGING INDICATOR									
			0E = nr. 2x1/8" ports, plugged	0E	0E	0E	0E	0E				
			11 = vacuum gauge**	11	11	11	11	11				
			91 = SPDT, vacuum switch**	91	91	91	91	91				
			33 = pressure gauge	33	33	33	33	33				
			P1 = SPDT, pressure switch***	P1	P1	P1	P1	P1				
X	X		ACCESSORIES									
			XX = no accessory available	XX	XX	XX	XX	XX				

SPARE PARTS ELEMENTS

FILTER HOUSING	FILTER ELEMENT	CLOGGING INDICATOR
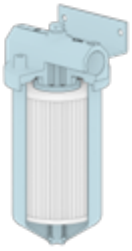	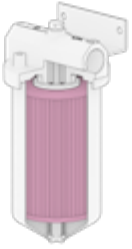	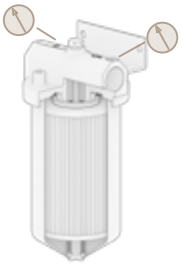
B M A	E M A	

FMA-LFM
SUCTION FILTERS

INSTALLATION DRAWING

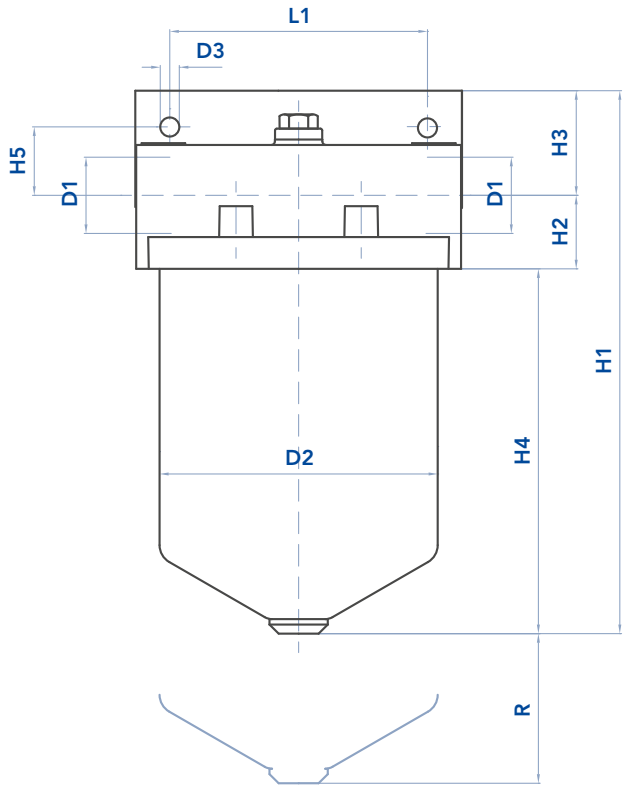

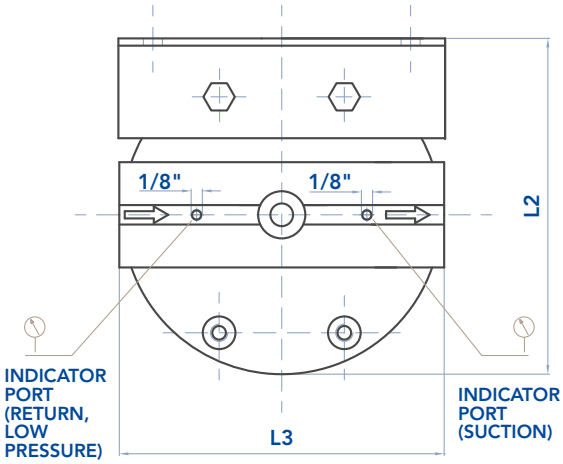

FILTER HOUSING

	D1	H1	H2	H3	L1	D2	H4	L2	D3	L3	H5	R	kg
FMA11 LFM010	3/8"- 1/2"	170	22	38	50	81	132	95	6,5	105	26	20	1,0
FMA21 LFM050	3/4"	245	37	39	100	114	206	135	8,5	140	24	25	2,0
FMA22 LFM070	1"	285	37	39	100	114	246	135	8,5	140	24	25	2,5
FMA31 LFM120	1"1/4	290	40	50	150	155	240	185	10,5	178	28	25	6,0
FMA32 LFM180	1"1/2	345	40	50	150	155	295	185	10,5	178	28	25	6,5

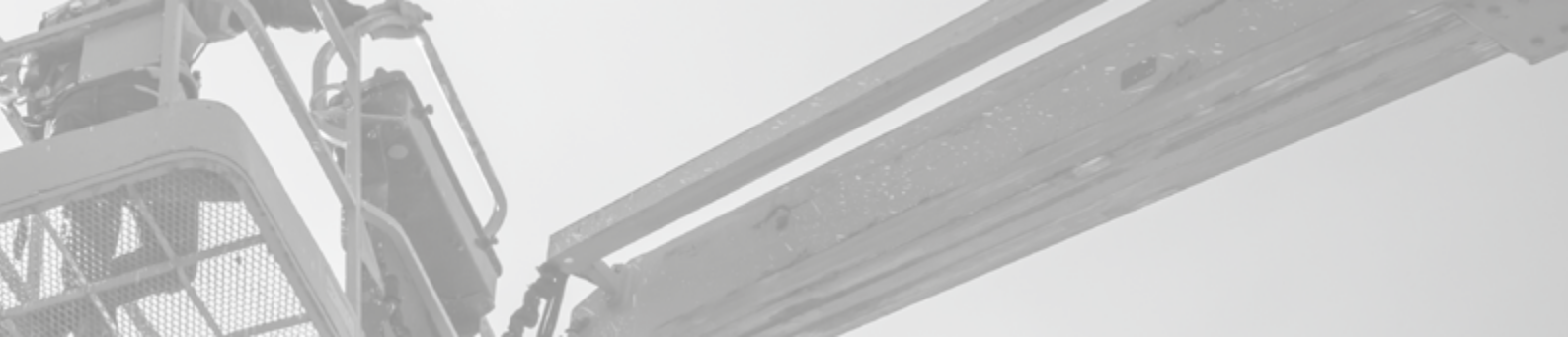

MAINTENANCE

The best time to change your filter element is just before it reaches its maximum dirt-holding capacity. For this reason, we recommend to monitor the pressure of the hydraulic oil flowing through the filter with a clogging indicator. When it is time to change the filter element, switch off the system before opening the filter housing and make sure there is no pressure in the filter. Unscrew the bowl and remove the dirty filter element. Clean the bowl; check the gaskets conditions and replace if necessary. Replace the filter element with an original UFI element, verifying the part number on the filter label or on the catalogue.
Replace the bowl in contact with the head gasket. Screw the upper tie-rod until the bowl is completely locked on the head ensuring the seal.
We recommend the stocking of a spare UFI filter element for timely replacement when required.



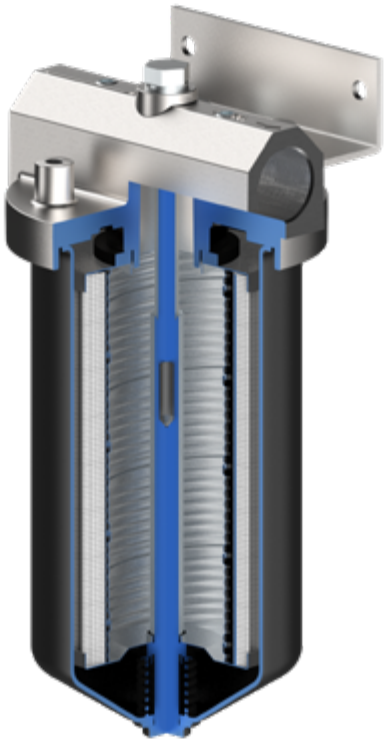

FILTER ELEMENT

				AREA (cm²)	
	A	B	C	Media M+	Media C+
EMA11 CLE010	70	29,5	88	480	1.180
EMA21 CLE050	70	29,5	134	750	1.800
EMA22 CLE070	95	41	175	1.650	2.400
EMA31 CLE120	140	65,5	145	1.740	4.440
EMA32 CLE180	140	65,5	205	2.490	6.390

The used filter elements cannot be cleaned and are classified as “Dangerous waste material”. They must be disposed according to local laws by authorized Companies.
Verify that the Company you choose has the expertise and authorization to dispose this type of waste material.

FMA-LFM
SUCTION FILTERS



RECOMMENDED FLOW RATES TABLE

Type	Media	l/min at Δ p 0,03 bar (suction line)	l/min at Δ p 0,5 bar (return or low pressure line)
FMA11B03	MD	7	58
	ME	8	62
	MF	8	72
	MG	8	72
	CC	4	45
	CD	6	55
FMA11B04	MD	11	75
	ME	11	79
	MF	12	95
	MG	12	95
	CC	8	58
	CD	10	72
FMA21	MD	21	177
	ME	23	185
	MF	34	197
	MG	34	197
	CC	17	132
	CD	19	148

Type	Media	l/min at Δ p 0,03 bar (suction line)	l/min at Δ p 0,5 bar (return or low pressure line)
FMA22	MD	35	349
	ME	41	265
	MF	45	303
	MG	45	303
	CC	27	185
	CD	30	220
FMA31	MD	91	535
	ME	106	556
	MF	136	590
	MG	136	590
	CC	45	386
	CD	61	428
FMA32	MD	207	638
	ME	235	749
	MF	329	783
	MG	87	503
	CC	87	503
	CD	140	628

N.B.

All the curves have been obtained with mineral oil having a kinematic viscosity 30 cSt and specific gravity 0,86 kg/dm3; for fluids with different features, please consider the factors described in the first part of this catalogue. All the curves are obtained from test done at the UFI HYDRAULIC DIVISION Laboratory, according to the specification ISO 3968. In case of discrepancy, please check the contamination level, viscosity and features of the fluid in use.

FSC-FSB
SUCTION FILTERS

MATERIALS

Housing: Aluminium alloy
FSC31 & FSC41
Cover & head: Aluminium alloy
Bowl: Polyammide
FSC71 & FSC81
Cover & housing: Aluminium
FSC51 & FSC61
Housing: Steel
Cover: Aluminium
Shut-off valve: Polyammide
Seals: NBR Nitrile
(FKM - on request fluoroelastomer)
Indicator housing: Brass

PRESSURE

Collapse, differential for the filter element (ISO 2941): 100 kPa (1 bar)

WORKING TEMPERATURE

From -25° to +110° C

COMPATIBILITY (ISO 2943)

Full with fluids: HH-HL-HM-HV-HTG
(according to ISO 6743/4)
For fluids different than the above mentioned,
please contact our Customer Service.



HYDRAULIC DIAGRAM

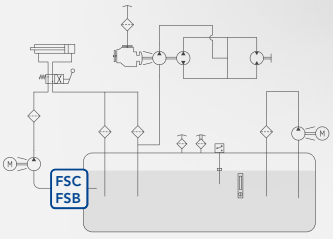

Is this datasheet the latest release? Please check on our website.

FSC
SUCTION FILTERS

ORDERING AND OPTION CHART

F	S	C	COMPLETE FILTER FAMILY							FILTER ELEMENT FAMILY	E	S	C
			SIZE & LENGHT	31	41	51	61	71	81	SIZE & LENGHT			
			PORT TYPE										
			B = BSP thread	B	B	-	-	-	-				
			F = SAE flange 3000 psi	-	F	F	F	F	F				
			PORT SIZE										
			10 = 1" 1/4 (B10 only)	10	-	-	-	-	-				
			12 = 1" 1/2 (B12 only)	-	12	-	-	-	-				
			16 = 2" (F16 only)	-	16	-	-	-	-				
			20 = 2" 1/2 (F20 only)	-	20	-	-	-	-				
			24 = 3"	-	-	24	-	24	-				
			32 =4"	-	-	-	32	-	32				
		W	BYPASS VALVE										
			W = no bypass	W	W	W	W	W	W				
			SEALS							SEALS			
			N = NBR Nitrile (only for complete filter)	N	N	N	N	N	N				
			F = FKM Fluoroelastomer (only for complete filter)	F	F	F	F	F	F				
			X = not applicable (only for filter element)	X	X	X	X	X	X				
			G = treatment for water-glycol (for filter and element)	G	G	G	G	G	G				
			FILTER MEDIA							FILTER MEDIA			
			ME = metal wire mesh 60 µm	ME	ME	ME	ME	ME	ME				
			MF = metal wire mesh 90 µm	MF	MF	MF	MF	MF	MF				
			MG = metal wire mesh 250 µm	MG	MG	MG	MG	MG	MG				
			CLOGGING INDICATOR										
			01 = 1/8" port, plugged	-	-	-	-	-	01				
			04 = nr.2 x 1/8" seats, plugged	04	04	04	04	04	-				
			10 = vacuum gauge, rear connection	10	10	10	10	10	10				
			91 = SPDT, vacuum switch	91	91	91	91	91	91				
			ACCESSORIES										
			W = without	W	W	W	W	W	W				
			M = magnetic core	-	M	M	M	M	M				
			ACCESSORIES										
			W = without	W	W	W	W	W	W				
			S = safety switch	-	S	S	S	S	S				

SPARE PARTS ELEMENTS

FILTER HOUSING	FILTER ELEMENT	CLOGGING INDICATOR	ACCESSORIES	
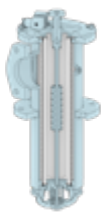	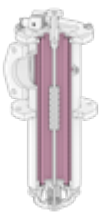	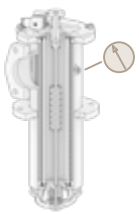		
BSC F W	ESC X			

FSB
SUCTION FILTERS

ORDERING AND OPTION CHART

F	S	B	COMPLETE FILTER FAMILY							FILTER ELEMENT FAMILY	C	S	F
			SIZE & LENGHT	110	501	550	535	560	540	SIZE & LENGHT			
				110	510	515	535	520	540				
			FILTER MEDIA							FILTER MEDIA			
			MS = metal wire mesh 60 µm	MS	MS	MS	MS	MS	MS				
			MN =metal wire mesh 90 µm	MN	MN	MN	MN	MN	MN				
			DC =metal wire mesh 250 µm	DC	DC	DC	DC	DC	DC				
			SEALS							SEALS			
			0 = not applicable (only for filter element)	0	0	0	0	0	0				
			1 = NBR Nitrile (only for complete filter)	1	1	1	1	1	1				
			3 = treatment for water-glycol (for filter and element)	3	3	3	3	3	3				
		0	BYPASS VALVE										
			0 = no bypass	0	0	0	0	0	0				
			PORT TYPE										
			B = BSP thread	B	B	B	B	B	B				
			F = SAE flange 3000 psi	F	F	F	F	F	F				
			PORT SIZE										
			6 = 1" 1/4	6	-	-	-	-	-				
			7 = 1" 1/2 only B	-	7	-	-	-	-				
			8 = 2" only F	-	8	-	-	-	-				
			9 = 2"1/2 only F	-	9	-	-	-	-				
			A = 3"	-	-	A	A	-	-				
			C = 4"	-	-	-	-	C	C				
			CLOGGING INDICATOR										
			01 = 1/8" port, plugged	-	-	-	-	-	01				
			04 = nr.2 x 1/8" seats, plugged	04	04	04	04	04	-				
			10 = vacuum gauge, rear connection	10	10	10	10	10	10				
			91 = SPDT, vacuum switch	91	91	91	91	91	91				
			ACCESSORIES										
			S = without	S	S	S	S	S	S				
			M = magnetic core	-	M	M	M	M	M				
			ACCESSORIES										
			S = without	S	S	S	S	S	S				
			E = safety switch	-	E	E	E	E	E				

SPARE SEAL KIT

	NBR	FKM
FSC31 FSB110	521.0088.2	521.0090.2
FSC41 FSB501	521.0023.2	521.0091.2
FSC51 FSB535	521.0089.2	521.0092.2
FSC61 FSB540	521.0024.2	521.0093.2
FSC71 FSB550	521.0097.2	521.0098.2
FSC81 FSB560	521.0099.2	521.0100.2

FSC-FSB
SUCTION FILTERS



INSTALLATION DRAWING

FSC51

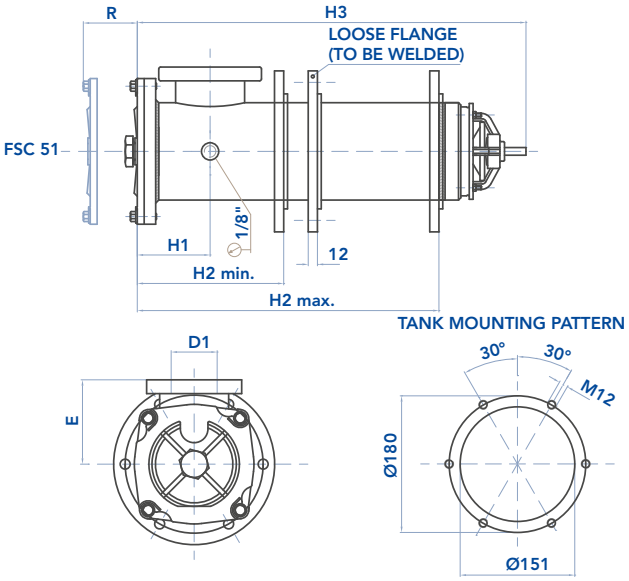

FSC61

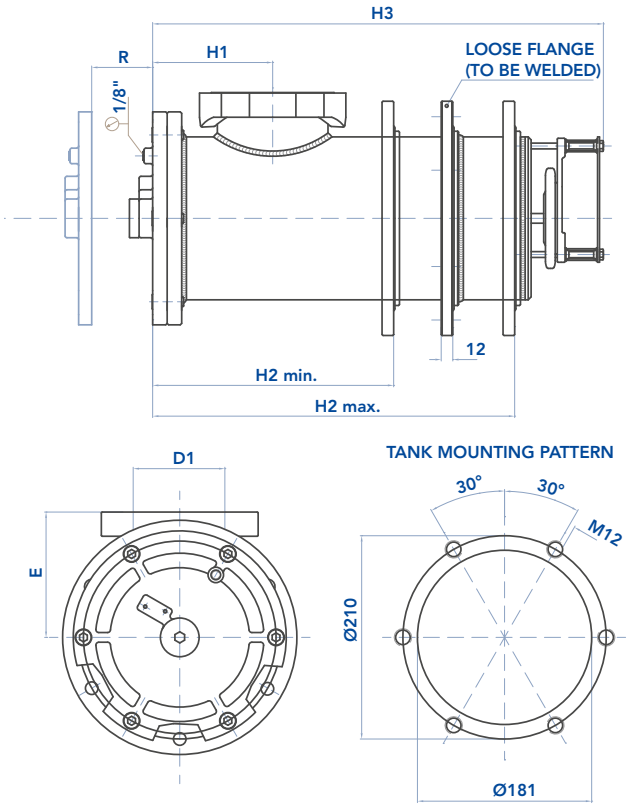

FILTER HOUSING

	D1	D2	E	H1	H2	H3	R	⬡	kg
FSC31 FSB110	1"1/4	-	-	42	80	275	250	22	1,6
FSC41 FSB501	1"1/2 - 2" - "1/2	-	-	66	120	322	300	32	3,0
FSC51 FSB535	3"	210	110	95	174 ÷ 355	480	500	32	13,0
FSC61 FSB540	4"	242	130	122	250 ÷ 405	470	500	32	16,0
FSC71 FSB550	3"	220	110	82	265	348,5	250	10	5,5
FSC81 FSB560	4"	242	110	82	264	348,5	250	10	6,0



INSTALLATION DRAWING

FSC 31

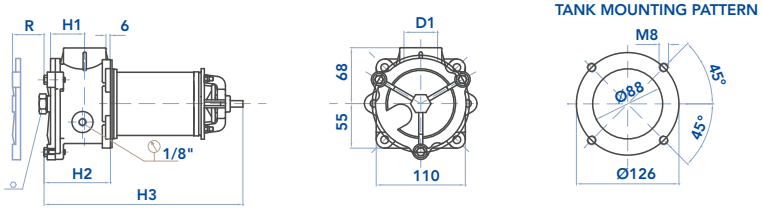

FSC 41

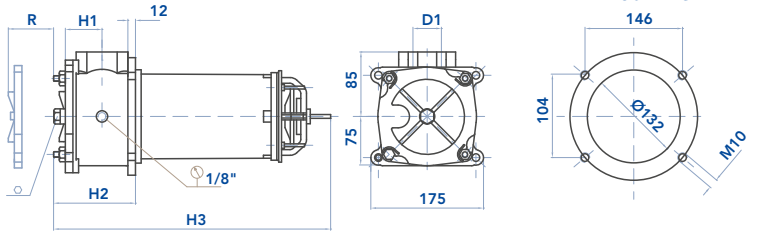

FSC 71

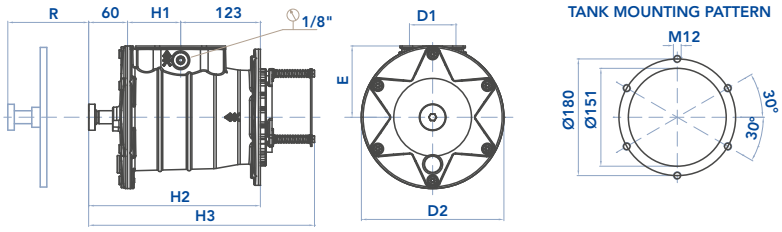

FSC 81

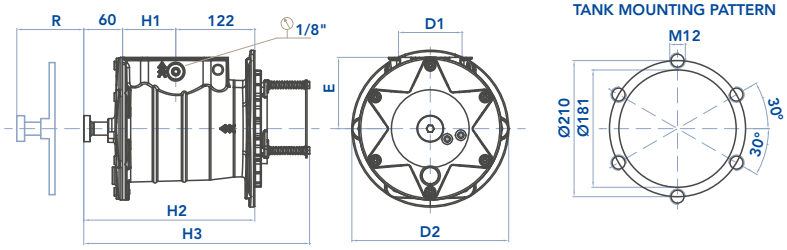

FILTER HOUSING

	D1	D2	E	H1	H2	H3	R	⬡	kg
FSC31 FSB110	1"1/4	-	-	42	80	275	250	22	1,6
FSC41 FSB501	1"1/2 - 2" - "1/2	-	-	66	120	322	300	32	3,0
FSC51 FSB535	3"	210	110	95	174 ÷ 355	480	500	32	13,0
FSC61 FSB540	4"	242	130	122	250 ÷ 405	470	500	32	16,0
FSC71 FSB550	3"	220	110	82	265	348,5	250	10	5,5
FSC81 FSB560	4"	242	110	82	264	348,5	250	10	6,0

FSC-FSB
SUCTION FILTERS



MAINTENANCE

The best time to change your filter element is just before it reaches its maximum dirt-holding capacity. For this reason, we recommend to monitor the pressure of the hydraulic oil flowing through the filter with a clogging indicator. When it is time to change the filter element, switch off the system before opening the filter housing.
Unscrew the tie rod, unscrew the cover of the filter head and remove the dirty filter element. Replace it with an original UFI element, verifying the part number on the filter label or on the catalogue. Check the gaskets conditions and replace if necessary. Insert the clean element, handling with care and cleanliness. Replace the cover on the filter head with the screw and screw the tie rod until it stops.
We recommend the stocking of a spare UFI filter element for timely replacement when required.

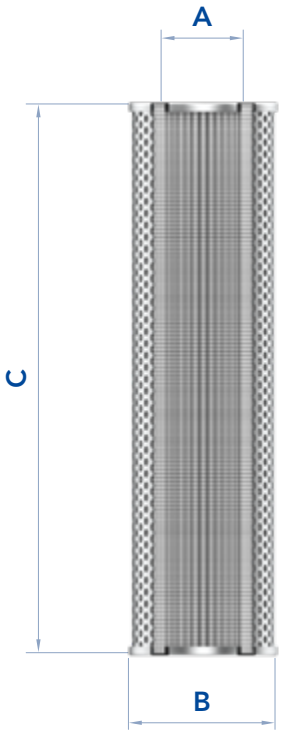

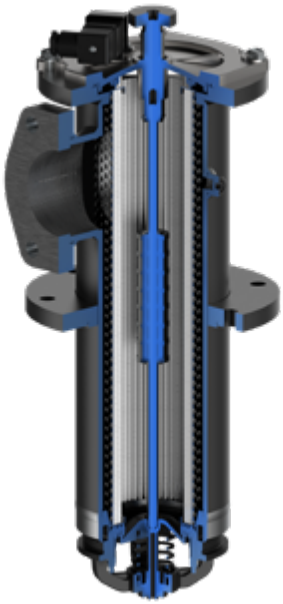

FILTER ELEMENT

	A	B	C	KG	AREA (cm²) Media M+
ESC31 CSF110	29,5	70	163	0,25	1.600
ESC41 CSF510	65	99	198	0,50	1.845
ESC51 CSF535	65	99	375	0,90	3.545
ESC61 CSF540	93	136	375	1,50	5.065
ESC71 CSF515	77	120	196	0,80	2.400
ESC81 CSF520	93	136	196	0,90	2.600

The used filter elements cannot be cleaned and are classified as “Dangerous waste material”. They must be disposed according to local laws by authorized Companies.
Verify that the Company you choose has the expertise and authorization to dispose this type of waste material.



PRESSURE DROP CURVES (ΔP)

The Pressure Drop (Δp) must be lower than 3 kPa (0,03 bar).

FILTER HOUSING PRESSURE DROP
(mainly depending on the port size)

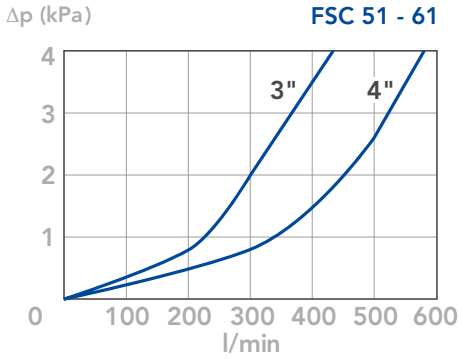

CLEAN FILTER ELEMENT PRESSURE DROP
(pressure drop values of the elements by ME - MF - MG media are very similar)

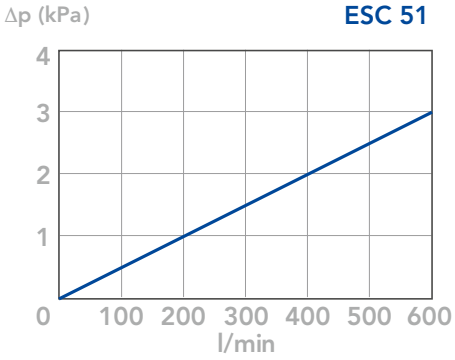

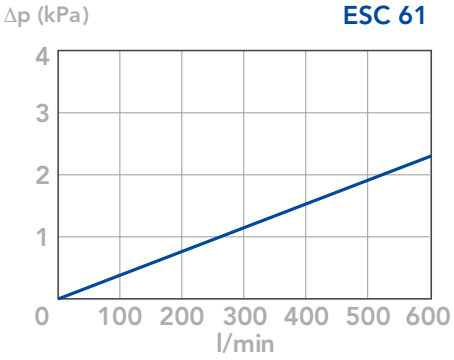

N.B.

All the curves have been obtained with mineral oil having a kinematic viscosity 30 cSt and specific gravity 0,86 kg/dm3; for fluids with different features, please consider the factors described in the first part of this catalogue. All the curves are obtained from test done at the UFI HYDRAULIC DIVISION Laboratory, according to the specification ISO 3968. In case of discrepancy, please check the contamination level, viscosity and features of the fluid in use.

FSC-FSB STANDARD SERIES
SUCTION FILTERS

PRESSURE DROP CURVES (ΔP)

The Pressure Drop (Δp) must be lower than 3 kPa (0,03 bar).

FILTER HOUSING PRESSURE DROP
(mainly depending on the port size)

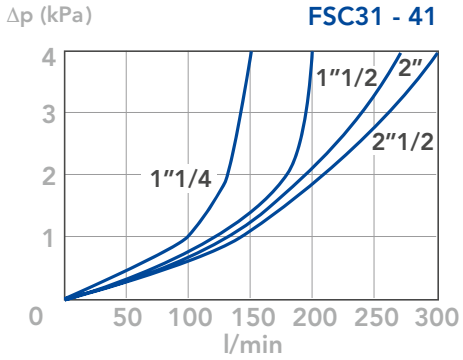

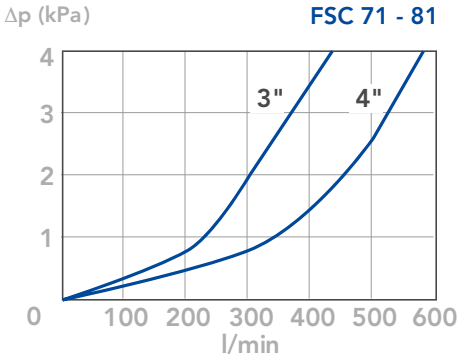

CLEAN FILTER ELEMENT PRESSURE DROP
(pressure drop values of the elements by ME - MF - MG media are very similar)

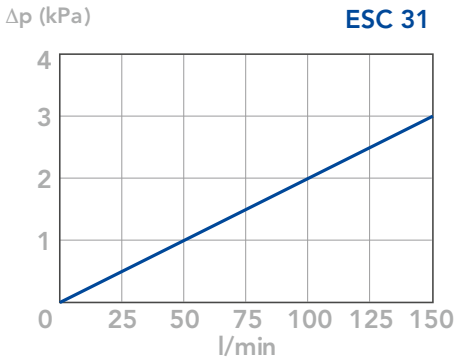

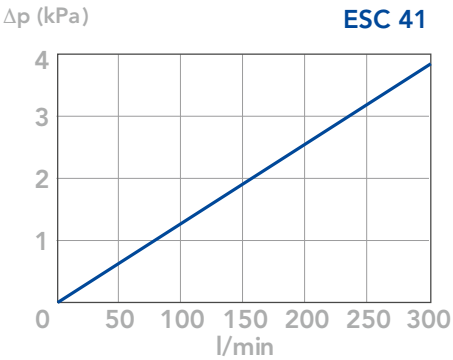

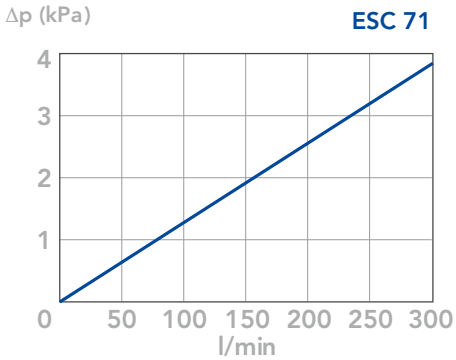

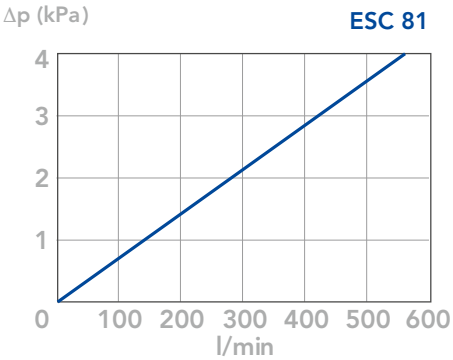

N.B.

All the curves have been obtained with mineral oil having a kinematic viscosity 30 cSt and specific gravity 0,86 kg/dm3; for fluids with different features, please consider the factors described in the first part of this catalogue. All the curves are obtained from test done at the UFI HYDRAULIC DIVISION Laboratory, according to the specification ISO 3968. In case of discrepancy, please check the contamination level, viscosity and features of the fluid in use.

FSD-MSE
SUCTION FILTERS

MATERIALS

Cover & housing: Anodized aluminium alloy
For 61&62 only: Cover: anodized aluminium alloy
Housing: steel
Bypass valve: Polyammide
Seals: NBR Nitrile (FKM on request fluoroelastomer)
Indicator housing: Brass

PRESSURE

Collapse, differential for filter element (ISO 2941): 1 MPa (10 bar)

WORKING TEMPERATURE

From -25° to +110° C

COMPATIBILITY (ISO 2943)

Full with fluids: HH-HL-HM-HV-HTG
(according to ISO 6743/4)
For fluids different than the above mentioned,
please contact our Customer Service.



HYDRAULIC DIAGRAM

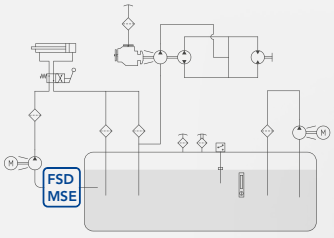

Is this datasheet the latest release? Please check on our website.

FSD
SUCTION FILTERS

ORDERING AND OPTION CHART

F	S	D	COMPLETE FILTER FAMILY								FILTER ELEMENT FAMILY	E	R	D
			SIZE & LENGHT	11	21	31	41	51	61	62	SIZE & LENGHT			
			PORT TYPE											
			B = BSP thread	B	B	B	B	B	-	-				
			N = NPT thread	N	N	N	N	N	-	-				
			S = SAE thread	S	S	S	S	S	-	-				
			F = SAE flange 3000 psi	-	-	F	F	F	F	F				
			PORT SIZE											
			04 = 1/2"	04	-	-	-	-	-	-				
			06 = 3/4"	-	06	-	-	-	-	-				
			08 = 1"	-		08	-	-	-	-				
			12 = 1" 1/2 (B12-N12 only)	-	-	-	12	-	-	-				
			20 = 2" 1/2 (B20-F20 only)	-	-	-	-	20	-	-				
			28= 3"1/2	-	-	-	-	-	28	-				
			32 =4"	-	-	-	-	-	-	32				
			BYPASS VALVE											
			W = no bypass	W	W	W	W	W	W	W				
			A = 35 kPa (0,35 bar)	A	A	A	A	A	A	A				
			SEALS								SEALS			
			N = NBR Nitrile	N	N	N	N	N	N	N				
			F = FKM Fluoroelastomer	F	F	F	F	F	F	F				
			FILTER MEDIA								FILTER MEDIA			
			ME = metal wire mesh 60 µm	ME	ME	ME	ME	ME	ME	ME				
			MF = metal wire mesh 90 µm	MF	MF	MF	MF	MF	MF	MF				
			MG = metal wire mesh 250 µm	MG	MG	MG	MG	MG	MG	MG				
			CLOGGING INDICATOR											
			08 = 1/8" seat , plugged	08	08	08	08	08	08	08				
			11 = vacuum gauge, bottom connection	11	11	11	11	11	11	11				
			91 = SPDT, vacuum switch	91	91	91	91	91	91	91				
X	X		ACCESSORIES											
			XX = no accessory available	XX	XX	XX	XX	XX	XX	XX				

SPARE PARTS ELEMENTS

FILTER HOUSING	FILTER ELEMENT	CLOGGING INDICATOR
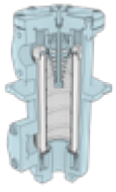	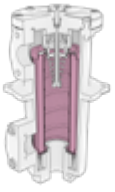	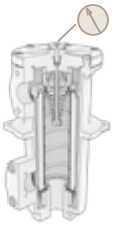
B S D	E R D	



MSE
SUCTION FILTERS

ORDERING AND OPTION CHART

M	S	E	COMPLETE FILTER FAMILY							FILTER ELEMENT FAMILY	C	R	H
			SIZE & LENGHT	008	015	025	070	150	250	SIZE & LENGHT			
			FILTER MEDIA							FILTER MEDIA			
			MS = metal wire mesh 60 µm	MS	MS	MS	MS	MS	MS				
			MN =metal wire mesh 90 µm	MN	MN	MN	MN	MN	MN				
			DC =metal wire mesh 250 µm	DC	DC	DC	DC	DC	DC				
			SEALS							SEALS			
			1 = NBR Nitrile	1	1	1	1	1	1				
			2 = FKM Fluoroelastomer	2	2	2	2	2	2				
			BYPASS VALVE										
			S = without	S	S	S	S	S	S				
			A = 35 kPa (0,35 bar)	A	A	A	A	A	A				
			PORT TYPE										
			B = BSP thread	B	B	B	B	B	-				
			N = NPT thread	N	N	N	N	N	-				
			S = SAE thread	S	S	S	S	S	-				
			F = SAE flange 3000 psi	-	-	F	F	F	F				
			PORT SIZE										
			3 = 1/2"	3	-	-	-	-	-				
			4 = 3/4"	-	4	-	-	-	-				
			5 = 1"	-	-	5	-	-	-				
			7 = 1"1/2	-	-	-	7	-	-				
			9 = 2"1/2	-	-	-	-	9	-				
			B = 3"1/2	-	-	-	-	-	B				
			CLOGGING INDICATOR										
			08 = 1/8" port, plugged	08	08	08	08	08	08				
			11 = vacuum gauge, bottom connection	11	11	11	11	11	11				
			91 = SPDT, vacuum switch	91	91	91	91	91	91				
X	X		ACCESSORIES										
			XX = no accessory available	XX	XX	XX	XX	XX	XX				

SPARE SEAL KIT

	NBR	FKM
FSD11 MSE008	521.0045.2	521.0050.2
FSD21 MSE015	521.0046.2	521.0051.2
FSD31 MSE025	521.0047.2	521.0052.2
FSD41 MSE070	521.0031.2	521.0019.2
FSD51 MSE150	521.0048.2	521.0053.2
FSD61 MSE250	521.0049.2	521.0054.2
FSD62	521.0049.2	521.0094.2



FSD-MSE
SUCTION FILTERS

INSTALLATION DRAWING

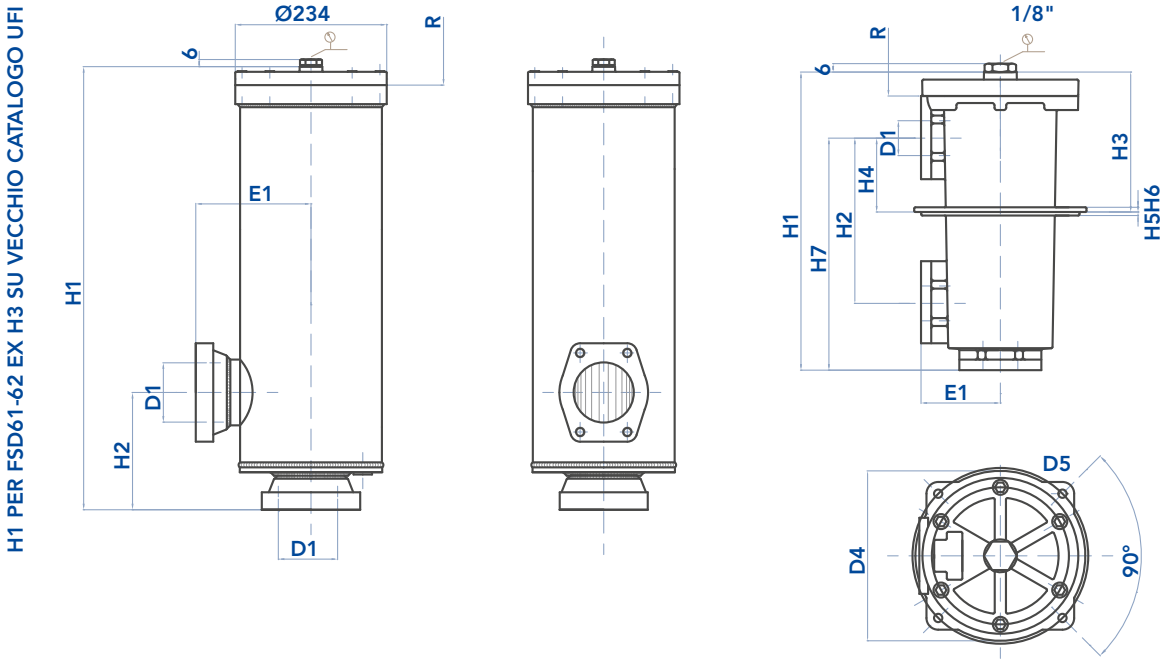

TANK MOUNTING PATTERN

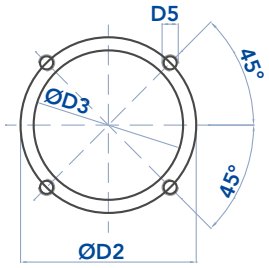

FILTER HOUSING

	D1	D2	D3	D4	D5	E1	H1	H2	H3	H4	H5	H6	R	Kg
FSD11 MSE008	1/2"	95	85	90	M5	43	160	62,5	96	31,5	4	3	105	1,3
FSD21 MSE015	3/4"	138	123	128	M6	57	191	105	100	52	6	3	110	2,6
FSD31 MSE025	1"	154	137	147	M6	67	250	140	117	63	8	4	155	3,7
FSD41 MSE070	1"1/2	180	164	174	M8	82	323	177	155	82	8	4	240	6,5
FSD51 MSE150	2"1/2	275	239	254	M10	117,5	420	218	192	91	10	8	275	14,2
FSD61 MSE250	3"1/2	-	-	-	-	178	1.130	200	673	457	-	-	525	49,0
FSD62	4"	-	-	-	-	178	1.590	200	1.110	480	-	-	1.020	75,0



MAINTENANCE

The best time to change your filter element is just before it reaches its maximum dirt-holding capacity. For this reason, we recommend to monitor the pressure of the hydraulic oil flowing through the filter with a clogging indicator. When it is time to change the filter element, switch off the system.
Unscrew the cover and remove it. If the filter has a by-pass valve, don't touch it.

Remove the dirty filter element using the upper handle. Replace it with an original UFI element, verifying the part number on the filter label or on the catalogue. Lubricate the gaskets for an optimal assembly. Position the cover carefully to ensure the seal on the filter element. Tighten the screws with the washers until it stops.
We recommend the stocking of a spare UFI filter element for timely replacement when required.

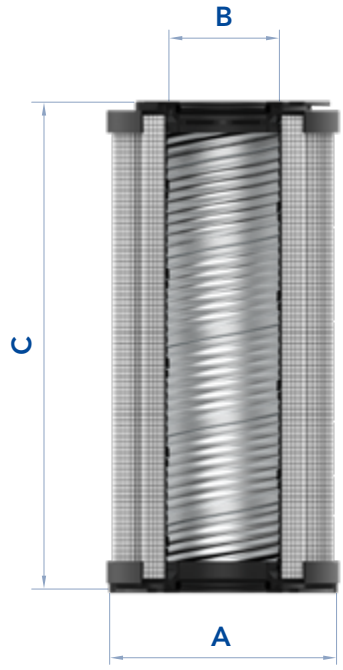

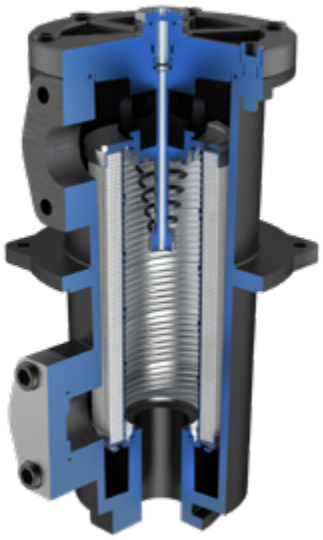

FILTER ELEMENT

					AREA (cm²)
	A	B	C	KG	Media M+
ERD11 CRH008	52	28/24	70	0,10	245
ERD21 CRH015	70	34	85	0,20	460
ERD31 CRH025	70	34	130	0,25	740
ERD41 CRH070	99	51	211	0,70	2.330
ERD51 CRH150	130	74	251	1,50	3.340
ERD61 CRH250	130	74/85	500	2,00	9.860
ERD62	143	96,3	896	3,80	22.000

The used filter elements cannot be cleaned and are classified as "Dangerous waste material". They must be disposed according to local laws by authorized Companies.
Verify that the Company you choose has the expertise and authorization to dispose this type of waste material.

FSD-MSE
SUCTION FILTERS

PRESSURE DROP CURVES (ΔP)

The Pressure Drop (Δp) must be lower than 3 kPa (0,03 bar).

FILTER HOUSING PRESSURE DROP
(mainly depending on the port size)

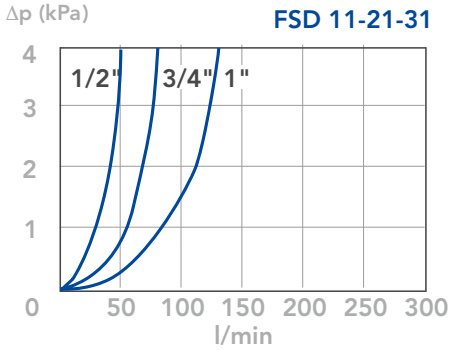

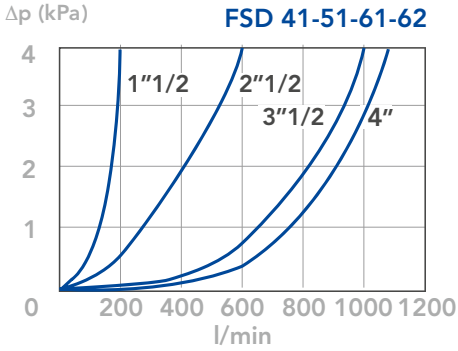

N.B.

All the curves have been obtained with mineral oil having a kinematic viscosity 30 cSt and specific gravity 0,86 kg/dm3; for fluids with different features, please consider the factors described in the first part of this catalogue. All the curves are obtained from test done at the UFI HYDRAULIC DIVISION Laboratory, according to the specification ISO 3968. In case of discrepancy, please check the contamination level, viscosity and features of the fluid in use.



CLEAN FILTER ELEMENT PRESSURE DROP
WITH M+ MEDIA
(depending both on the internal diameter
of the element and on the filter media)

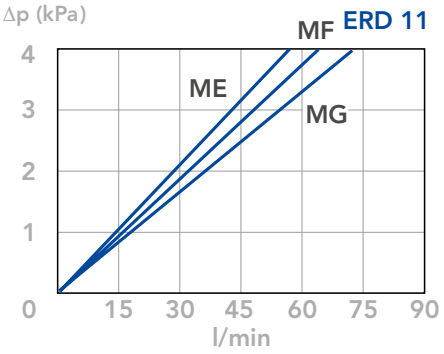

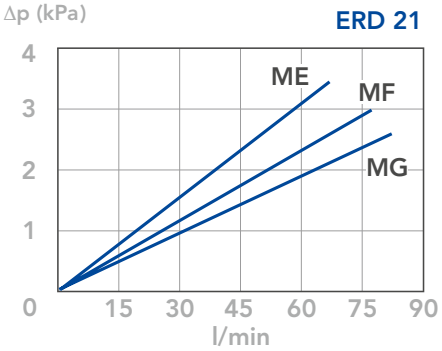

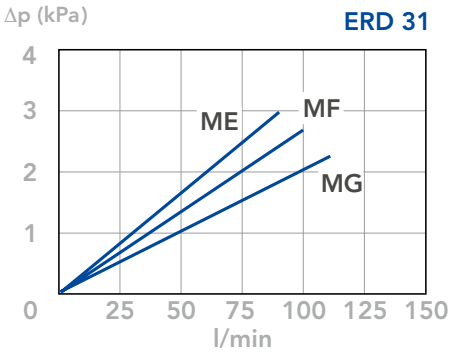

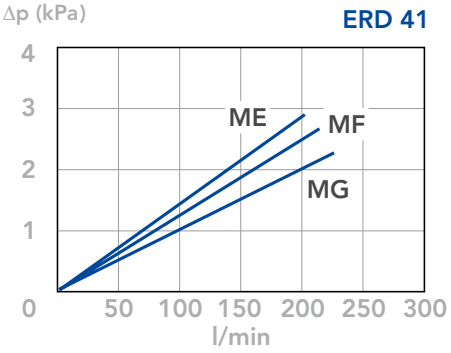

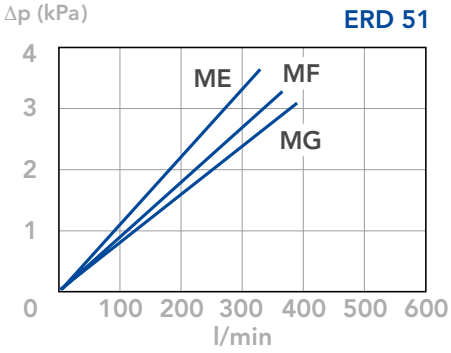

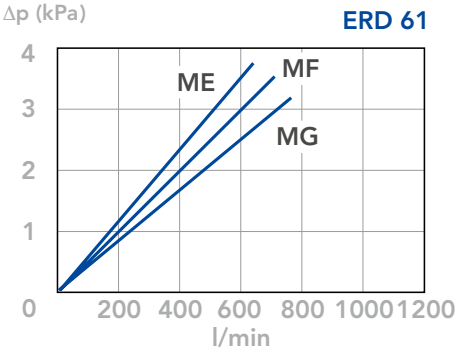

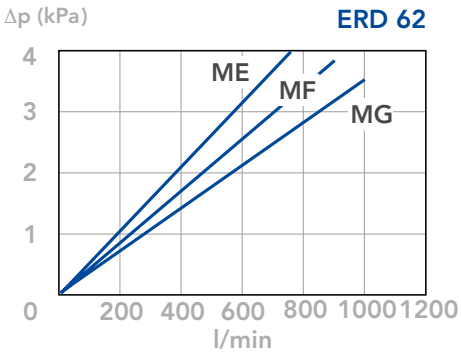

N.B.

All the curves have been obtained with mineral oil having a kinematic viscosity 30 cSt and specific gravity 0,86 kg/dm3; for fluids with different features, please consider the factors described in the first part of this catalogue. All the curves are obtained from test done at the UFI HYDRAULIC DIVISION Laboratory, according to the specification ISO 3968. In case of discrepancy, please check the contamination level, viscosity and features of the fluid in use.

FSD-MSE
SUCTION FILTERS



BYPASS VALVE PRESSURE DROP

When selecting the filter size, these curves must be taken into account if it is foreseen that any flow peak is to be absorbed by the bypass valve, it also must be of proper configuration to avoid pressure peaks. The valve pressure drop is directly proportional to fluid specific gravity.

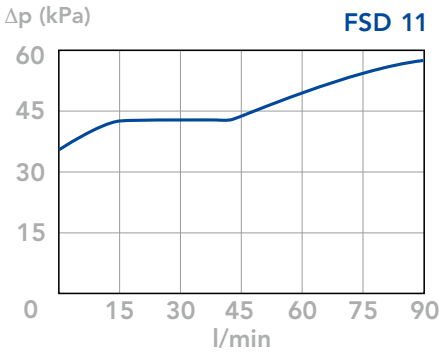

FSD 11

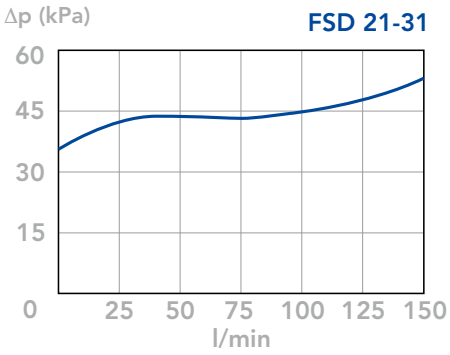

FSD 21-31

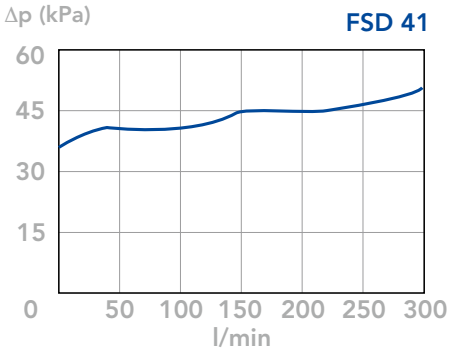

FSD 41

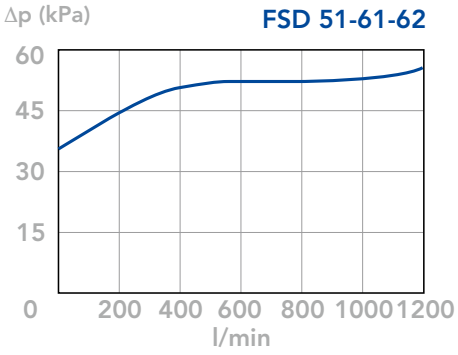

FSD 51-61-62

N.B.

All the curves have been obtained with mineral oil having a kinematic viscosity 30 cSt and specific gravity 0,86 kg/dm3; for fluids with different features, please consider the factors described in the first part of this catalogue. All the curves are obtained from test done at the UFI HYDRAULIC DIVISION Laboratory, according to the specification ISO 3968. In case of discrepancy, please check the contamination level, viscosity and features of the fluid in use.

FSE-AMF
SUCTION FILTERS

MATERIALS

Head: Aluminium alloy
Spin-on cartridge: Steel
Bypass valve: Polyammide
Seals: NBR Nitrile (FKM on request fluoroelastomer)
Indicator housing: Brass

PRESSURE

Max working: 1,2 MPa (12 bar)
Collapse, differential for filter element (ISO 2941): 400 kPa (4 bar)

BYPASS VALVE

Setting: 30 kPa (0,30 bar) ± 10%

WORKING TEMPERATURE

From -25° to +110° C

COMPATIBILITY (ISO 2943)

Full with fluids: HH-HL-HM-HV-HTG
(according to ISO 6743/4)
For fluids different than the above mentioned,
please contact our Customer Service.



HYDRAULIC DIAGRAM

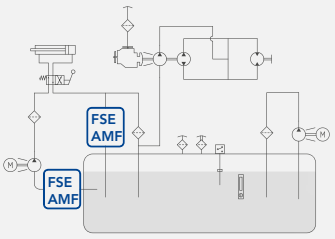

Is this datasheet the latest release? Please check on our website.

FSE
SUCTION FILTERS

ORDERING AND OPTION CHART

F	S	E	COMPLETE FILTER FAMILY									FILTER ELEMENT FAMILY	E	S	E
			SIZE & LENGHT	11	12	21	22	31*	32*	41*	42*	SIZE & LENGHT			
			PORT TYPE												
			B = BSP thread	B	B	B	B	B	B	B	B				
			F = SAE flange 3000 psi, metric screws	-	-	-	-	-	-	F	F				
			PORT SIZE												
			06 = 3/4"	06	06	-	-	-	-	-	-				
			10 = 1" 1/4	-		10	10	-	-	-	-				
			12 = 1" 1/2	-	-	-	-	12	12	12	12				
			BYPASS VALVE												
			W = no bypass	W	W	W	W	W	W	W	W				
			A = 30 kPa (0,30 bar)	A	A	A	A	A	A	A	A				
			SEALS									SEALS			
			N = NBR Nitrile	N	N	N	N	N	N	N	N				
			F = FKM Fluoroelastomer	F	F	F	F	F	F	F	F				
			FILTER MEDIA									FILTER MEDIA			
			CC = impregnated cellulose 10 µm β>2	CC	CC	CC	CC	CC	CC	CC	CC				
			CD = impregnated cellulose 25 µm β>2	CD	CD	CD	CD	CD	CD	CD	CD				
			ME = metal wire mesh 60 µm	ME	ME	ME	ME	ME	ME	ME	ME				
			MF = metal wire mesh 90 µm	MF	MF	MF	MF	MF	MF	MF	MF				
			CLOGGING INDICATOR												
			08 = 1/8" seat , plugged	06	06	06	06	06	06	06	06				
			10 = vacuum gauge, bottom connection	10	10	10	10	10	10	10	10				
			91 = SPDT, vacuum switch	91	91	91	91	91	91	91	91				
X	X		ACCESSORIES												
			XX = no accessory available	XX	XX	XX	XX	XX	XX	XX	XX				

SPARE PARTS ELEMENTS

FILTER HOUSING	FILTER ELEMENT	CLOGGING INDICATOR
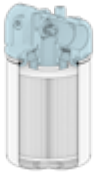		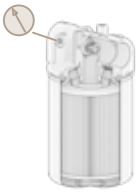
B S E	E S E	



AMF
SUCTION FILTERS

ORDERING AND OPTION CHART

A	M	F	COMPLETE FILTER FAMILY									FILTER ELEMENT FAMILY	C	C	A
			SIZE & LENGHT	151	152	301	302	601*	602*	801*	802*	SIZE & LENGHT			
			FILTER MEDIA									FILTER MEDIA			
			CD = impregnated cellulose 10 µm(c) β>2	CD	CD	CD	CD	CD	CD	CD	CD				
			CV = impregnated cellulose 25 µm(c) β>2	CV	CV	CV	CV	CV	CV	CV	CV				
			MS = metal wire mesh 60 µm	MS	MS	MS	MS	MS	MS	MS	MS				
			MN = metal wire mesh 90 µm	MN	MN	MN	MN	MN	MN	MN	MN				
			SEALS									SEALS			
			1 = NBR 1itrile	1	1	1	1	1	1	1	1				
			2 = FKM Fluoroelastomer	2	2	2	2	2	2	2	2				
			BYPASS VALVE												
			S = without	S	S	S	S	S	S	S	S				
			A = 30 kPa (0,30 bar)	A	A	A	A	A	A	A	A				
			PORT TYPE												
			B = BSP thread	B	B	B	B	B	B	B	B				
			F = SAE flange 3000 psi	-	-	-	-	-	-	F	F				
			PORT SIZE												
			4 = 3/4"	4	4	-	-	-	-	-	-				
			6 = 1" 1/4	-	-	6	6	-	-	-	-				
			7 = 1" 1/2	-	-	-	-	7	7	7	7				
			CLOGGING INDICATOR												
			06 = port, plugged	06	06	06	06	06	06	06	06				
			10 = vacuum gauge, bottom connection	10	10	10	10	10	10	10	10				
			91 = SPDT, vacuum switch	91	91	91	91	91	91	91	91				
X	X		ACCESSORIES												
			XX = no accessory available	XX	XX	XX	XX	XX	XX	XX	XX				

NOTES

* When ordering the filter elements, please consider the following information:
ESE31 = 2 x ESE21
ESE32 = 2 x ESE22
ESE41 = 2 x ESE21
ESE42 = 2 x ESE22

* When ordering the filter elements, please consider the following information:
CCA601 = 2 x CCA301
CCA602 = 2 x CCA302
CCA801 = 2 x CCA301
CCA802 = 2 x CCA302

FSE-AMF
SUCTION FILTERS

INSTALLATION DRAWING

FSE 1+ E FSE 2+

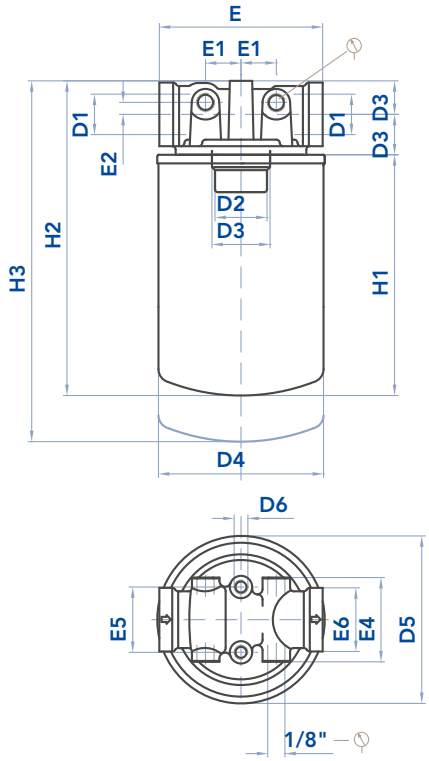

FSE 3+

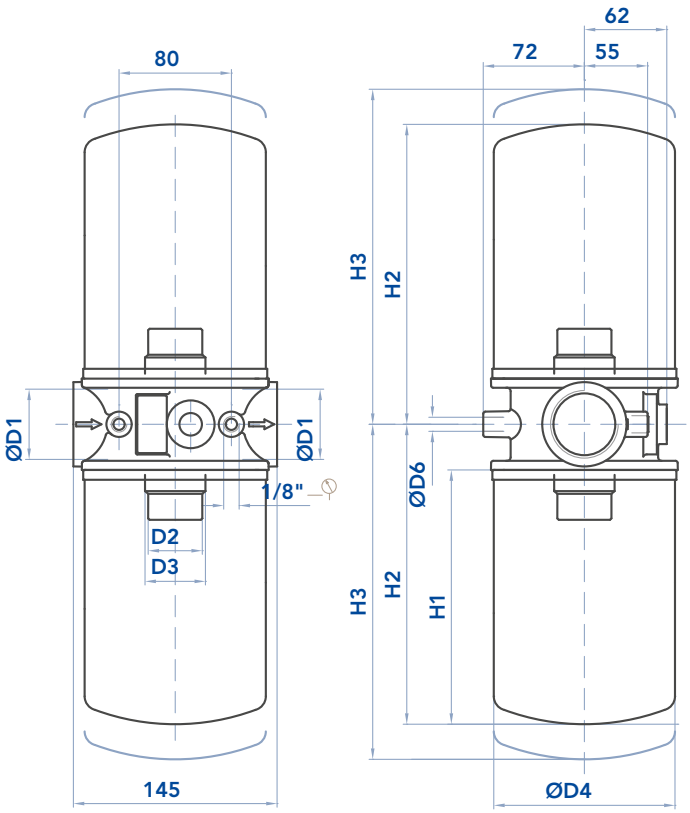



FSE 4+

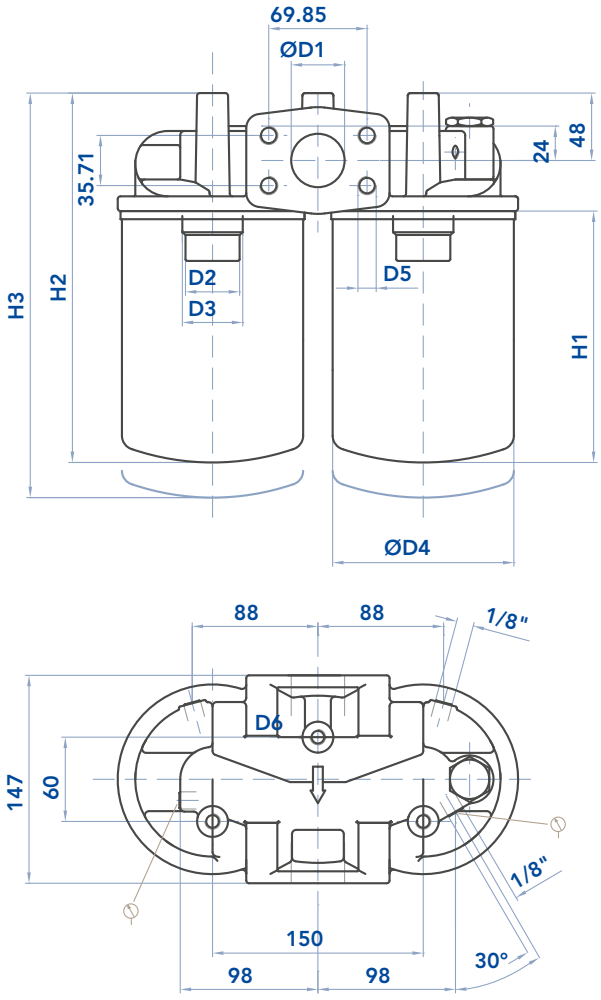

FILTER HOUSING

	D1	D2	D3	D4	D5	D6	E	E1	E2	E3	E4	E5	E6	H1	H2	H3	Kg
FSE11 AMF151	3/4"	3/4"BSP	-	96	96	M8	95	20,5	7	20	49	38	37	145	188	208	1,2
FSE12 AMF152	3/4"	3/4"BSP	-	96	96	M8	95	20,5	7	20	49	38	37	191	234	254	1,5
FSE21 AMF301	1"1/4	1"1/2 16-UN	1"1/4 BSP	129	134	M8	133	35	10	30	64	50	57	181	248	278	1,9
FSE22 AMF302	1"1/4	1"1/2 16-UN	1"1/4 BSP	129	134	M8	133	35	10	30	64	50	57	226	293	323	2,0
FSE31 AMF601	1"1/2	1"1/2 16-UN	1"1/4 BSP	129	-	M10	-	-	-	-	-	-	-	181	216	246	3,6
FSE32 AMF602	1"1/2	1"1/2 16-UN	1"1/4 BSP	129	-	M10	-	-	-	-	-	-	-	226	261	291	3,8
FSE41 AMF801	1"1/2	1"1/2 16-UN	1"1/4 BSP	129	M12	M10	-	-	-	-	-	-	-	181	269	299	4,8
FSE42 AMF802	1"1/2	1"1/2 16-UN	1"1/4 BSP	129	M12	M10	-	-	-	-	-	-	-	226	314	344	5,0

FSE-AMF
SUCTION FILTERS



MAINTENANCE

The best time to change your filter element is just before it reaches its maximum dirt-holding capacity. For this reason, we recommend to monitor the pressure of the hydraulic oil flowing through the filter with a clogging indicator. When it is time to change the filter element, switch off the system. Remove the dirty filter element. Replace it with an original UFI element, verifying the part number on the filter label or on the catalogue. Lubricate the spin-on gasket, screw on the head until it stops and tighten by turning it 3/4 of a turn.
We recommend the stocking of a spare UFI filter element for timely replacement when required.

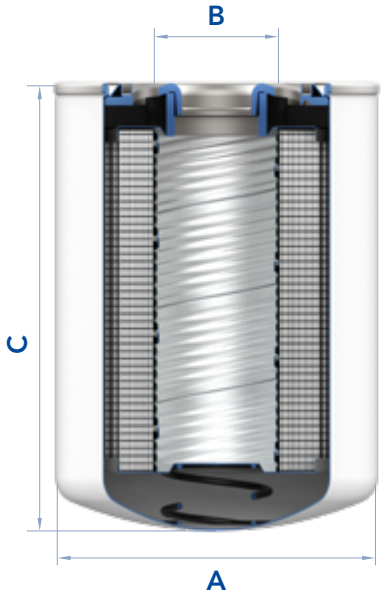

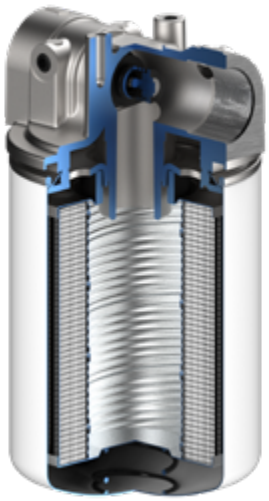

FILTER ELEMENT

					AREA (cm²)	
	A	B	C	KG	Media M+	Media C+
ESE11 CCA151	96,5	3/4" BSP	146	0,70	980	3.305
ESE12 CCA152	96,5	3/4" BSP	191	0,80	1.390	4.745
ESE21 CCA301	129	1"1/4 BSP	181	1,20	1.940	5.560
ESE22 CCA302	129	1"1/4 BSP	226	1,40	2.570	7.360

The used filter elements cannot be cleaned and are classified as “Dangerous waste material”. They must be disposed according to local laws by authorized Companies.
Verify that the Company you choose has the expertise and authorization to dispose this type of waste material.

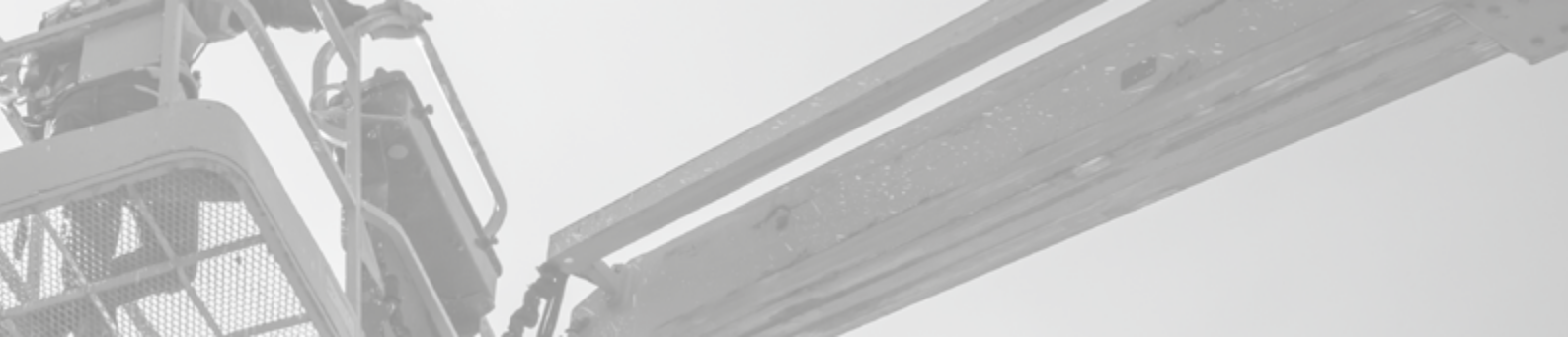

PRESSURE DROP CURVES (ΔP)

The “Assembly Pressure Drop (Δp)” is obtained by adding the pressure drop values of the Filter Housing and of the Clean Filter Element corresponding to the considered Flow Rate and it must be lower than 3 kPa (0,03 bar)

FILTER HOUSING PRESSURE DROP
(mainly depending on the port size)

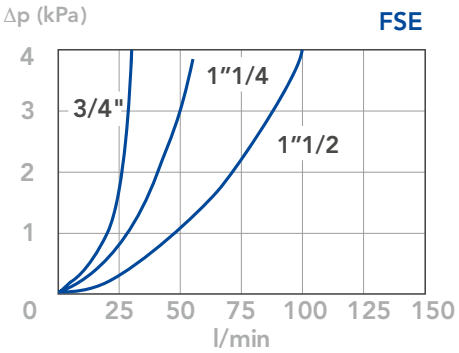

CLEAN FILTER ELEMENT PRESSURE DROP WITH M+ MEDIA
(depending both on the internal diameter of the element and on the filter media)

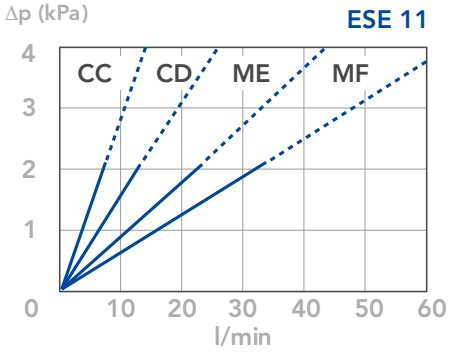

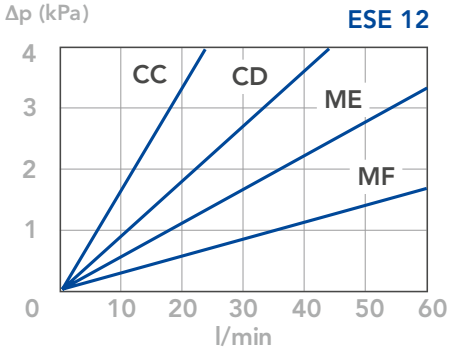

N.B.

All the curves have been obtained with mineral oil having a kinematic viscosity 30 cSt and specific gravity 0,86 kg/dm3; for fluids with different features, please consider the factors described in the first part of this catalogue. All the curves are obtained from test done at the UFI HYDRAULIC DIVISION Laboratory, according to the specification ISO 3968. In case of discrepancy, please check the contamination level, viscosity and features of the fluid in use.

FSE-AMF
SUCTION FILTERS



FSE3+ and FSE4+ filters use double element canisters. The Assembly Pres-sure Drop is therefore determined by adding the Housing Pressure Drop at the real flow rate and half the pressure drop of the ESE2+ element. E.g. The pressure drop of a complete FSE31-----FC--- filter at a 60 l/min flow rate is obtained by adding the Housing Pressure Drop and half the ESE21NFC element pressure drop at 60 l/min

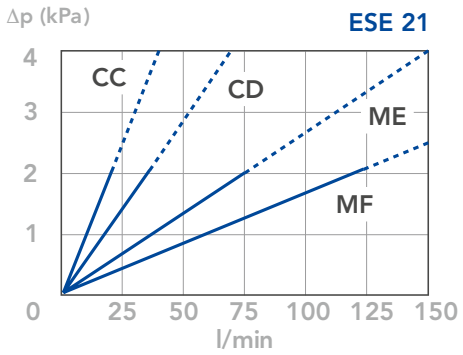

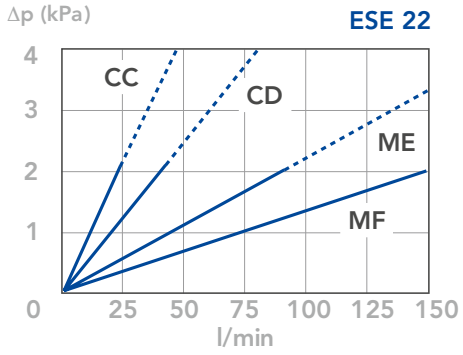

BYPASS VALVE PRESSURE DROP

When selecting the filter size, these curves must be taken into account if it is foreseen that any flow peak is to be absorbed by the bypass valve, it also must be of proper configuration to avoid pressure peaks. The valve pressure drop is directly proportional to fluid specific gravity.

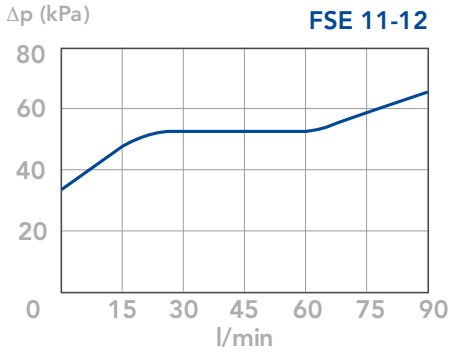

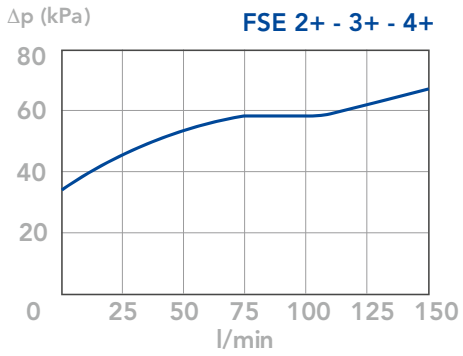

N.B.

All the curves have been obtained with mineral oil having a kinematic viscosity 30 cSt and specific gravity 0,86 kg/dm3; for fluids with different features, please consider the factors described in the first part of this catalogue. All the curves are obtained from test done at the UFI HYDRAULIC DIVISION Laboratory, according to the specification ISO 3968. In case of discrepancy, please check the contamination level, viscosity and features of the fluid in use.

FSG-FAC
SUCTION FILTERS

MATERIALS

Lid: polyamide
Housing: aluminium alloy
Seals: NBR Nitrile

PRESSURE

Collapse, differential for filter element (ISO 2941): 1 MPa (1 bar)

WORKING TEMPERATURE

From -25° to +110° C

COMPATIBILITY (ISO 2943)

Full with fluids: HH-HL-HM-HV-HTG
(according to ISO 6743/4)
For fluids different than the above mentioned,
please contact our Customer Service



HYDRAULIC DIAGRAM

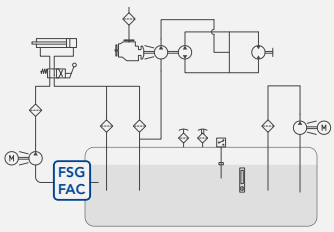

Is this datasheet the latest release? Please check on our website.

FSG
SUCTION FILTERS

ORDERING AND OPTION CHART

F	S	G	COMPLETE FILTER FAMILY		
			SIZE & LENGHT	11	13
		B	PORT TYPE		
			B = BSP thread	B	B
	1	0	PORT SIZE *		
			10 = 1" 1/4	10	10
		W	BYPASS VALVE		
			W = without bypass	W	W
			SEALS		
			N = NBR Nitrile	N	N
	C	C	FILTER MEDIA		
			CC = impregnated cellulose 10 µm	CC	CC
			CLOGGING INDICATOR		
			01 = 1/8" port, plugged	01	01
			10 = vacuum gauge, rear connection	10	10
			91 = SPDT, vacuum switch	91	91
		W	ACCESSORIES		
			W = without	W	W
		X	ACCESSORIES		
			X = without	X	X

FILTER ELEMENT FAMILY	E	S	G
SIZE & LENGHT			
SEALS			
FILTER MEDIA			

SPARE PARTS ELEMENTS

FILTER HOUSING	FILTER ELEMENT	CLOGGING INDICATOR
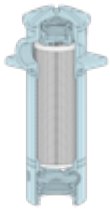		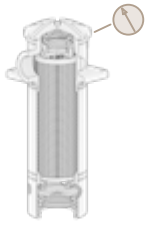
B S G 0 4 X X	E S G	

FAC
SUCTION FILTERS

ORDERING AND OPTION CHART

F	A	C	COMPLETE FILTER FAMILY		
			SIZE & LENGHT	110	130
	C	D	FILTER MEDIA		
			CD = impregnated cellulose 10 µm	CD	CD
		1	SEALS		
			1= NBR Nitrile	1	1
		S	BYPASS VALVE		
			S = without bypass	S	S
		B	PORT TYPE		
			B = BSP thread	B	B
		6	PORT SIZE		
			6 = 1" 1/4	6	6
			CLOGGING INDICATOR		
			01 = 1/8" port, plugged	01	01
			10 = vacuum gauge, rear connection	10	10
			91 = SPDT, vacuum switch	91	91
		S	ACCESSORIES		
			S = without	S	S
		X	ACCESSORIES		
			X= without	X	X

FILTER ELEMENT FAMILY	C	A	C
SIZE & LENGHT			
FILTER MEDIA			
SEALS			

NOTES

* Port size B08 (1") on request, please check availability with our Customer Service

FSG-FAC
SUCTION FILTERS



INSTALLATION DRAWING

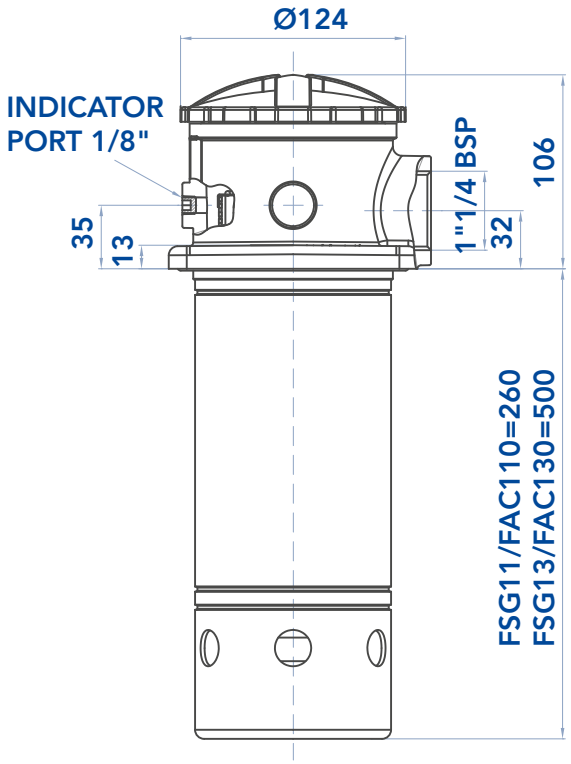

FILTER WEIGHT

	Kg
FSG11 FAC110	2,8
FSG13 FAC130	3,2

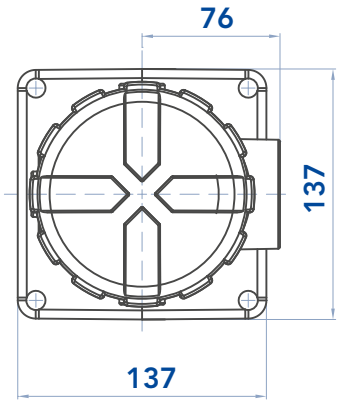

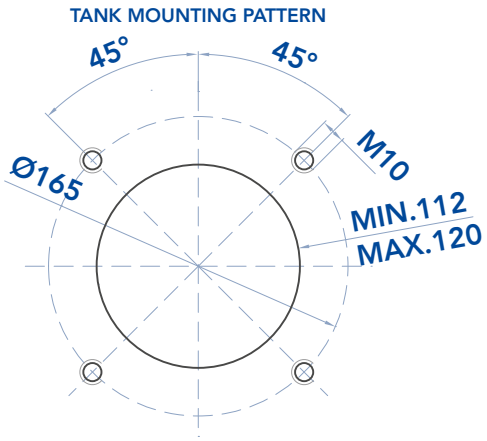

MAINTENANCE

The best time to change your filter element is just before it reaches its maximum dirt-holding capacity. For this reason, we recommend to monitor the pressure of the hydraulic oil flowing through the filter with a clogging indicator. When it is time to change the filter element, switch off the system before opening the filter housing. Unscrew the cover of the filter head and remove the dirty filter element. Replace it with an original UFI element, verifying the part number on the filter label or on the catalogue. Check the gaskets conditions and replace if necessary. Insert the clean element, handling with care and cleanliness. Screw the cover on the filter head.

We recommend the stocking of a spare UFI filter element for timely replacement when required.



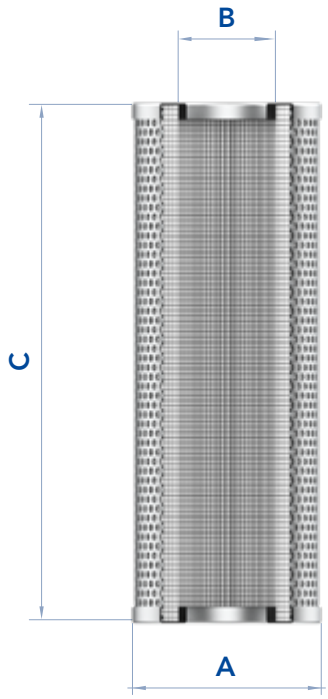



FILTER ELEMENT

	A	B	C	AREA (cm²) Media C
ESG11 CAC110	83	50	230	5.000
ESG13 CAC130	83	50	472	9.300

The used filter elements cannot be cleaned and are classified as "Dangerous waste material". They must be disposed according to local laws by authorized Companies.
Verify that the Company you choose has the expertise and authorization to dispose this type of waste material.

PRESSURE DROP CURVES (ΔP)

The Pressure Drop (Δp) must be lower than 3 kPa (0,03 bar).

COMPLETE FILTER PRESSURE DROP
(mainly depending on the port size)

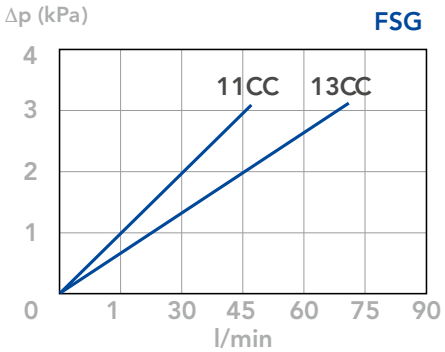

N.B.

All the curves have been obtained with mineral oil having a kinematic viscosity 30 cSt and specific gravity 0,86 kg/dm3; for fluids with different features, please consider the factors described in the first part of this catalogue. All the curves are obtained from test done at the UFI HYDRAULIC DIVISION Laboratory, according to the specification ISO 3968. In case of discrepancy, please check the contamination level, viscosity and features of the fluid in use.



PRESSURE FILTERS

MAIN-LINE, HIGH EFFICIENCY FILTRATION

Application:
Ufi pressure filters are generally used for the following applications: hydraulic Transmission and power-steering applications, general main-line, open-loop pressure filters for full-flow hydraulic system conditions.

User Benefits:
- main-line, high-efficiency, full-flow fine filtration for the protection of precision valves and fluid-power proportional controls.
- high-performance, high-dirt-holding capacity, micro-fibre filter elements keep the cost of ownership (running-costs) low between planned vehicle service-intervals
- non-welded housing design for extended life and safer operation.

FPA-MDM
PRESSURE FILTERS



MATERIALS

Housing: Anodized aluminium alloy
Bypass valve: Brass
Seals: NBR Nitrile (FKM Fluoroelastomer - on request)
Indicator housing: Brass

PRESSURE

Max working: 11 MPa (110 bar)
Collapse, differential for the filter element (ISO 2941):
8 MPa (80 bar)

BYPASS VALVE

Setting: 600 kPa (6 bar) ± 10%

WORKING TEMPERATURE

From -25° to +110° C

COMPATIBILITY (ISO 2943)

Full with fluids: HH-HL-HM-HV-HTG
(according to ISO 6743/4)
For fluids different than the above mentioned,
please contact our Customer Service.



HYDRAULIC DIAGRAM

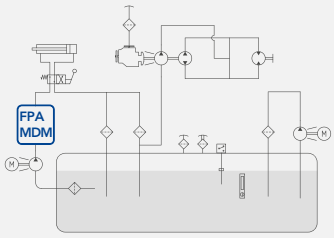

Is this datasheet the latest release? Please check on our website.

FPA
PRESSURE FILTERS

ORDERING AND OPTION CHART

F	P	A	COMPLETE FILTER FAMILY		
			SIZE & LENGHT	11	12
			PORT TYPE		
			B = BSP thread	B	B
			N = NPT thread *	N	N
			S = SAE thread *	S	S
			PORT SIZE		
			04 = 1/2" (N04 not available)	04	04
			BYPASS VALVE		
			W = without	W	W
			C = 600 kPa (6 bar)	C	C
			SEALS		
			N = NBR Nitrile	N	N
			F = FKM Fluoroelastomer	F	F
			FILTER MEDIA		
			FA = fibreglass 5 µm(c) β>1.000	FA	FA
			FB = fibreglass 7 µm(c) β>1.000	FB	FB
			FC = fibreglass 12 µm(c) β>1.000	FC	FC
			FS = fibreglass 16 µm(c) β>1.000	FS	FS
			FD = fibreglass 21 µm(c) β>1.000	FD	FD
			FE = fibreglass 30 µm(c) β>1.000	FE	FE
			CLOGGING INDICATOR**		
			03 = port, plugged	03	03
			5E = visual differential 500 kPa (5 bar)	5E	5E
			6E = electrical differential 500 kPa (5 bar)	6E	6E
			7E = indicator 6E with LED	7E	7E
			T2 = elect. diff. 500 kPa (5 bar) with thermostat 30°C	T2	T2
X	X		ACCESSORIES		
			XX = no accessory available	XX	XX

FILTER ELEMENT FAMILY	E	P	A
SIZE & LENGHT			
SEALS			
FILTER MEDIA			

SPARE PARTS ELEMENTS

FILTER HOUSING	FILTER ELEMENT	CLOGGING INDICATOR
	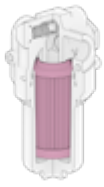	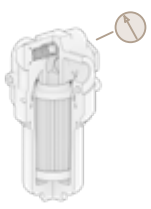
B P A 0 4 X X	E P A	

MDM
PRESSURE FILTERS

ORDERING AND OPTION CHART

M	D	M	COMPLETE FILTER FAMILY		
			SIZE & LENGHT	101	102
			FILTER MEDIA		
			FT = fibreglass 5 µm(c) β>1.000	FT	FT
			FC = fibreglass 7 µm(c) β>1.000	FC	FC
			FD = fibreglass 12 µm(c) β>1.000	FD	FD
			FS = fibreglass 16 µm(c) β>1.000	FS	FS
			FV = fibreglass 21 µm(c) β>1.000	FV	FV
			SEALS		
			1 = NBR Nitrile	1	1
			2 = FKM Fluoroelastomer	2	2
			BYPASS VALVE		
			S = without	S	S
			C = 600 kPa (6 bar)	C	C
			PORT TYPE		
			B = BSP thread	B	B
			N = NPT thread *	N	N
			S = SAE thread *	S	S
			PORT SIZE		
			3 = 1/2" (N3 not available)	3	3
			CLOGGING INDICATOR **		
			03 = port, plugged	03	03
			5E = visual differential 500 kPa (5 bar)	5E	5E
			6E = electrical differential 500 kPa (5 bar)	6E	6E
			7E = indicator 6E with LED	7E	7E
			T2 = elect. diff. 500 kPa (5 bar) with thermostat 30°C	T2	T2
X	X		ACCESSORIES		
			XX = no accessory available	XX	XX

FILTER ELEMENT FAMILY	C	D	M
SIZE & LENGHT			
FILTER MEDIA			
SEALS			

SPARE SEAL KIT

	NBR	FKM
FPA11 MDM101	521.0001.2	521.0062.2
FPA12 MDM102	521.0001.2	521.0062.2

* Not standard version, please check availability with our Customer Service

** When the filter is ordered with FKM seals, the first digit of the indicator code is a letter
(please see Clogging Indicator Chapter for further details)

FPA-MDM
PRESSURE FILTERS

INSTALLATION DRAWING

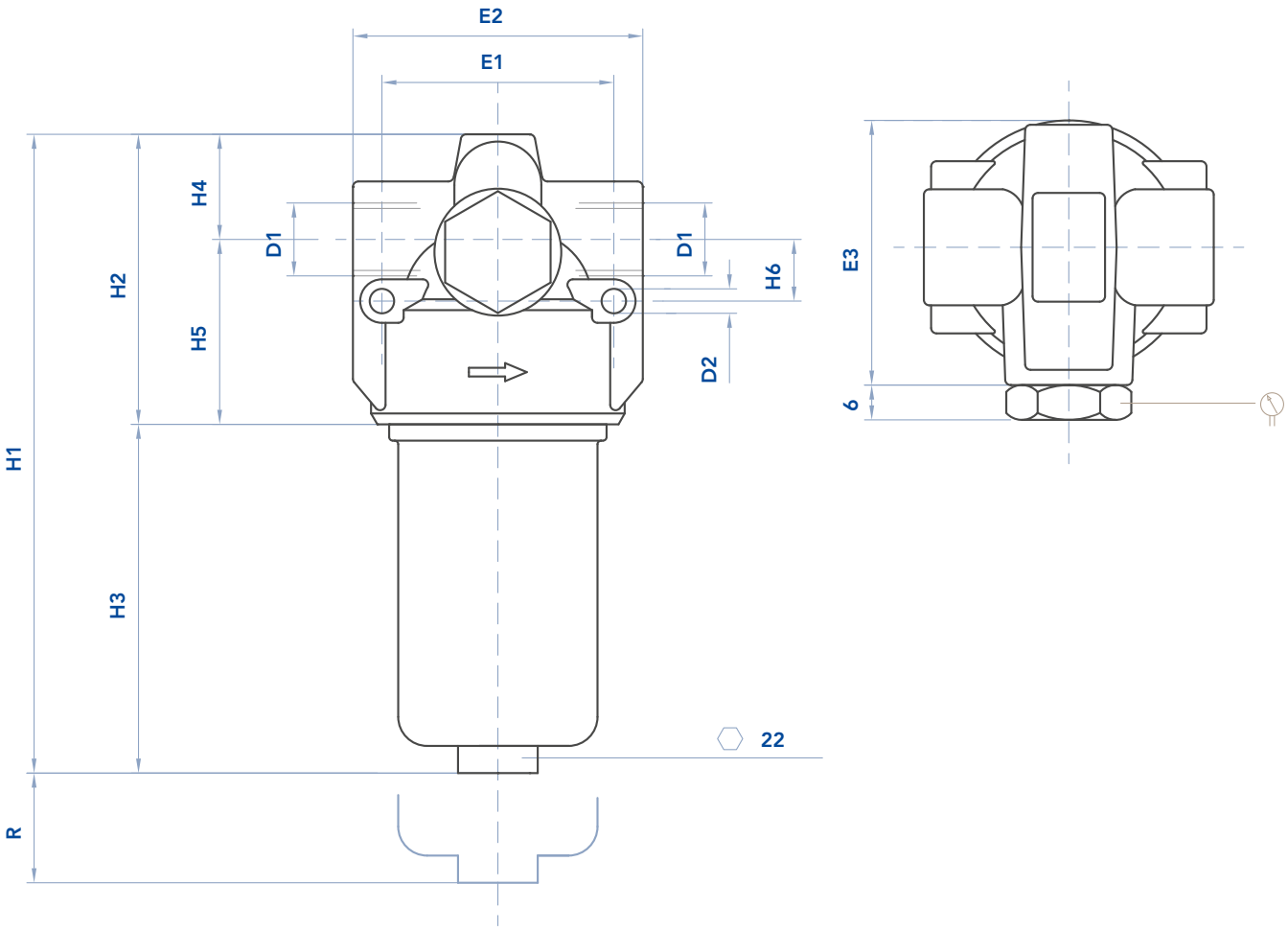

FILTER HOUSING

	D1	D2	H1	H2	H3	H4	H5	H6	E1	E2	E3	R	Kg
FPA11 MDM101	1/2"	6,5	157	78	79	28	50	17	64	76	75	60	0,65
FPA12 MDM102	1/2"	6,5	244	78	166	28	50	17	64	76	75	60	0,85



MAINTENANCE

The best time to change your filter element is just before it reaches its maximum dirt-holding capacity. For this reason, we recommend to monitor the pressure of the hydraulic oil flowing through the filter with a clogging indicator. When it is time to change the filter element, switch off the system before opening the filter housing and make sure there is no pressure in the filter. Unscrew the bowl and remove the dirty filter element. Replace it with an original UFI element, verifying the part number on the filter label or on the catalogue. Clean the bowl; check the gaskets conditions and replace if necessary. Insert the clean element into his seat, handling with care and cleanliness. Screw the housing until it stops, with a tightening torque of 50 Nm +5/0.
We recommend the stocking of a spare UFI filter element for timely replacement when required.
N.B. The used filter elements cannot be cleaned and are classified as "Dangerous waste material": they must be disposed according to the local laws by authorized Companies.

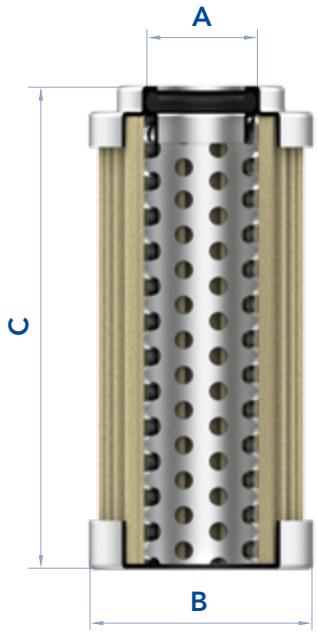



FILTER ELEMENT

	A	B	C	Kg	AREA (cm^2) Media F+
EPA11 CDM101	22	42	91	0,15	295
EPA12 CDM102	22	42	179	0,25	600

The used filter elements cannot be cleaned and are classified as "Dangerous waste material". They must be disposed according to local laws by authorized Companies.
Verify that the Company you choose has the expertise and authorization to dispose this type of waste material.



FPA-MDM
PRESSURE FILTERS

PRESSURE DROP CURVES (ΔP)

The “Assembly Pressure Drop (Δp)” is obtained by adding the pressure drop values of the Filter Housing and of the Clean Filter Element corresponding to the considered Flow Rate and it must be lower than 80 kPa (0,8 bar) and should never exceed 1/3 of the bypass valve setting.

BYPASS VALVE PRESSURE DROP
When selecting the filter size, these curves must be taken into account if it is foreseen that any flow peak is to be absorbed by the bypass valve, it also must be of proper configuration to avoid pressure peaks. The valve pressure drop is directly proportional to fluid specific gravity.

FILTER HOUSING PRESSURE DROP
(mainly depending on the port size)

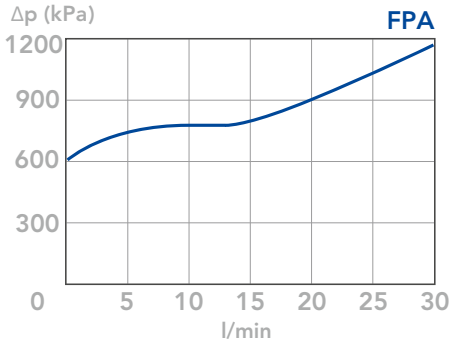

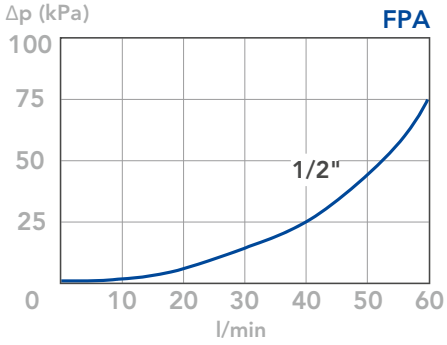

CLEAN FILTER ELEMENT PRESSURE DROP WITH F+ MEDIA
(depending both on the internal diameter of the element and on the filter media)

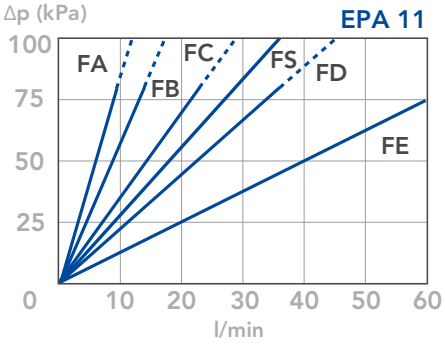

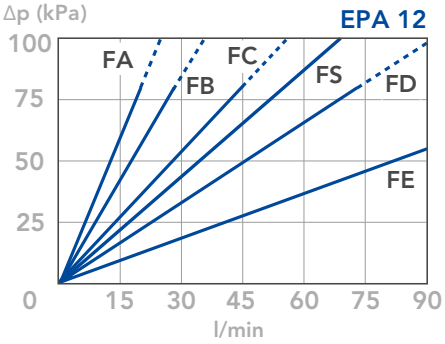

N.B.

All the curves have been obtained with mineral oil having a kinematic viscosity 30 cSt and specific gravity 0,86 Kg/dm3; for fluids with different features, please consider the factors described in the first part of this catalogue. All the curves are obtained from test done at the UFI HYDRAULIC DIVISION Laboratory, according to the specification ISO 3968. In case of discrepancy, please check the contamination level, viscosity and features of the fluid in use.

FPB-MHT
PRESSURE FILTERS



MATERIALS

Head: Cast iron
Bowl: Steel
Bypass valve: Steel
Seals: NBR Nitrile (FKM - on request fluoroelastomer)
Indicator housing: Brass

PRESSURE

Max working: 42 MPa (420 bar)
Collapse, differential for the filter element (ISO 2941):
series standard 2 MPa (20 bar)
series H+ 21 MPa (210 bar)

BYPASS VALVE

Setting: 600 kPa (6 bar) ± 10%

WORKING TEMPERATURE

From -25° to +110° C

COMPATIBILITY (ISO 2943)

Full with fluids: HH-HL-HM-HV-HTG
(according to ISO 6743/4)
For fluids different than the above mentioned,
please contact our Customer Service



HYDRAULIC DIAGRAM

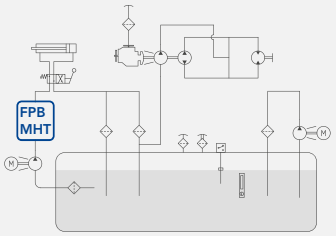

Is this datasheet the latest release? Please check on our website.

FPB
PRESSURE FILTERS

ORDERING AND OPTION CHART

F	P	B	COMPLETE FILTER FAMILY											FILTER ELEMENT FAMILY	E	P	B
			SIZE & LENGHT	11	12	13	21	22	31	32	33	34	35	SIZE & LENGHT			
			PORT TYPE														
			B = BSP thread	B	B	B	B	B	B	B	B	B	B				
			N = NPT thread	N	N	N	N	N	N	N	N	N	N				
			S = SAE thread	S	S	S	S	S	S	S	S	S	S				
			F = SAE flange 3000 psi	-	-	-	F	F	F	F	F	F	F				
			G = SAE flange 6000 psi	-	-	-	G	G	G	G	G	G	G				
			PORT SIZE														
			04 = 1/2" (N04 not available)	04	04	04	-	-	-	-	-	-	-				
			06 = 3/4" (F06 not available)	06	06	06	06	06	-	-	-	-	-				
			08 = 1" (G08 not available; F08 for FPB2 only)	-	-	-	08	08	08	08	08	08	08				
			10 = 1" 1/4 (N10 not available)	-	-	-	-	-	10	10	10	10	10				
			12 = 1" 1/2 (G12 option not available)	-	-	-	-	-	12	12	12	12	12				
			BYPASS VALVE														
			W = without	W	W	W	W	W	W	W	W	W	W				
			C = 600 kPa (6 bar)	C	C	C	C	C	C	C	C	C	C				
			R = reverse flow valve*	-	-	-	R	R	R	R	R	R	R				
			P = reverse flow + bypass valve*	-	-	-	P	P	P	P	P	P	P				
			SEALS											SEALS			
			N = NBR Nitrile	N	N	N	N	N	N	N	N	N	N				
			F = FKM Fluoroelastomer	F	F	F	F	F	F	F	F	F	F				
			FILTER MEDIA											FILTER MEDIA			
			FA = fibreglass 5 µm(c) β>1.000 Δp 2MPa (20 bar)	FA	FA	FA	FA	FA	FA	FA	FA	FA	FA				
			FB = fibreglass 7 µm(c) β>1.000 Δp 2MPa (20 bar)	FB	FB	FB	FB	FB	FB	FB	FB	FB	FB				
			FC = fibreglass 12 µm(c) β>1.000 Δp 2MPa (20 bar)	FC	FC	FC	FC	FC	FC	FC	FC	FC	FC				
			FS = fibreglass 16 µm(c) β>1.000 Δp 2MPa (20 bar)	FS	FS	FS	FS	FS	FS	FS	FS	FS	FS				
			FD = fibreglass 21 µm(c) β>1.000 Δp 2MPa (20 bar)	FD	FD	FD	FD	FD	FD	FD	FD	FD	FD				
			FE = fibreglass 30 µm(c) β>1.000 Δp 2MPa (20 bar)	FE	FE	FE	FE	FE	FE	FE	FE	FE	FE				
			HA =fibreglass 5 µm(c) β>1.000 Δp 21MPa (210 bar)	HA	HA	HA	HA	HA	HA	HA	HA	HA	HA				
			HB = fibreglass 7 µm(c) β>1.000 Δp 21MPa (210 bar)	HB	HB	HB	HB	HB	HB	HB	HB	HB	HB				
			HC = fibreglass 12 µm(c) β>1.000 Δp 21MPa (210 bar)	HC	HC	HC	HC	HC	HC	HC	HC	HC	HC				
			HD = fibreglass 21 µm(c) β>1.000 Δp 21MPa (210 bar)	HD	HD	HD	HD	HD	HD	HD	HD	HD	HD				
			CLOGGING INDICATOR **														
			03 = port, plugged	03	03	03	03	03	03	03	03	03	03				
			5E = visual differential 500 kPa (5 bar)	5E	5E	5E	5E	5E	5E	5E	5E	5E	5E				
			5F = visual differential 800 kPa (8 bar)	5F	5F	5F	5F	5F	5F	5F	5F	5F	5F				
			6E = electrical differential 500 kPa (5 bar)	6E	6E	6E	6E	6E	6E	6E	6E	6E	6E				
			6F = electrical differential 800 kPa (8 bar)	6F	6F	6F	6F	6F	6F	6F	6F	6F	6F				
			7E = indicator 6E with LED	7E	7E	7E	7E	7E	7E	7E	7E	7E	7E				
			7F = indicator 6F with LED	7F	7F	7F	7F	7F	7F	7F	7F	7F	7F				
			T2 = elect. diff. 500 kPa (5 bar) with thermostat 30°C	T2	T2	T2	T2	T2	T2	T2	T2	T2	T2				
			T3 = elect. diff. 800 kPa (8 bar) with thermostat 30°C	T3	T3	T3	T3	T3	T3	T3	T3	T3	T3				
X	X		ACCESSORIES														
			XX = no accessory available	XX	XX	XX	XX	XX	XX	XX	XX	XX	XX				

* Not standard version, please check availability with our Customer Service

** When the filter is ordered with FKM seals, the first digit of the indicator code is a letter (please see Clogging Indicator Chapter for further details)

MHT
PRESSURE FILTERS



ORDERING AND OPTION CHART

M	H	T	COMPLETE FILTER FAMILY											FILTER ELEMENT FAMILY	C	C	H
			SIZE & LENGHT	151	152	153	301	302	801	802	803	804	805	SIZE & LENGHT			
			FILTER MEDIA											FILTER MEDIA			
			FT = fibreglass 5 µm(c) β>1.000 Δp 2MPa (20 bar)	FT	FT	FT	FT	FT	FT	FT	FT	FT	FT				
			FC = fibreglass 7 µm(c) β>1.000 Δp 2MPa (20 bar)	FC	FC	FC	FC	FC	FC	FC	FC	FC	FC				
			FD = fibreglass 12 µm(c) β>1.000 Δp 2MPa (20 bar)	FD	FD	FD	FD	FD	FD	FD	FD	FD	FD				
			FS = fibreglass 16 µm(c) β>1.000 Δp 2MPa (20 bar)	FS	FS	FS	FS	FS	FS	FS	FS	FS	FS				
			FV = fibreglass 21 µm(c) β>1.000 Δp 2MPa (20 bar)	FV	FV	FV	FV	FV	FV	FV	FV	FV	FV				
			2T = fibreglass 5 µm(c) β>1.000 Δp 21MPa (210 bar)	2T	2T	2T	2T	2T	2T	2T	2T	2T	2T				
			2C = fibreglass 7 µm(c) β>1.000 Δp 21MPa (210 bar)	2C	2C	2C	2C	2C	2C	2C	2C	2C	2C				
			2D = fibreglass 12 µm(c) β>1.000 Δp 21MPa (210 bar)	2D	2D	2D	2D	2D	2D	2D	2D	2D	2D				
			2V = fibreglass 21 µm(c) β>1.000 Δp 21MPa (210 bar)	2V	2V	2V	2V	2V	2V	2V	2V	2V	2V				
			SEALS											SEALS			
			1 = NBR 1itrile	1	1	1	1	1	1	1	1	1	1				
			2 = FKM Fluoroelastomer	2	2	2	2	2	2	2	2	2	2				
			BYPASS VALVE														
			S = without	S	S	S	S	S	S	S	S	S	S				
			C = 600 kPa (6 bar)	C	C	C	C	C	C	C	C	C	C				
			R = reverse flow valve*	-	-	-	R	R	R	R	R	R	R				
			P = reverse flow + bypass valve*	-	-	-	P	P	P	P	P	P	P				
			PORT TYPE														
			B = BSP thread	B	B	B	B	B	B	B	B	B	B				
			N = NPT thread	N	N	N	N	N	N	N	N	N	N				
			S = SAE thread	S	S	S	S	S	S	S	S	S	S				
			F = SAE flange 3000 psi	-	-	-	F	F	F	F	F	F	F				
			H = SAE flange 6000 psi	-	-	-	H	H	H	H	H	H	H				
			PORT SIZE														
			3 = 1/2" (N3 not available)	3	3	3	-	-	-	-	-	-	-				
			4 = 3/4" (F4 not available)	4	4	4	4	4	-	-	-	-	-				
			5 = 1" (G5 not available; F5 for FPB2 only)	-	-	-	5	5	5	5	5	5	5				
			6 = 1" 1/4 (N6 not available)	-	-	-	-	-	6	6	6	6	6				
			7 = 1" 1/2 (G7 option not available)	-	-	-	-	-	7	7	7	7	7				
			CLOGGING INDICATOR														
			03 = port, plugged	03	03	03	03	03	03	03	03	03	03				
			5E = visual differential 500 kPa (5 bar)	5E	5E	5E	5E	5E	5E	5E	5E	5E	5E				
			5F = visual differential 800 kPa (8 bar)	5F	5F	5F	5F	5F	5F	5F	5F	5F	5F				
			6E = electrical differential 500 kPa (5 bar)	6E	6E	6E	6E	6E	6E	6E	6E	6E	6E				
			6F = electrical differential 800 kPa (8 bar)	6F	6F	6F	6F	6F	6F	6F	6F	6F	6F				
			7E = indicator 6E with LED	7E	7E	7E	7E	7E	7E	7E	7E	7E	7E				
			7F = indicator 6F with LED	7F	7F	7F	7F	7F	7F	7F	7F	7F	7F				
			T2 = elect. diff. 500 kPa (5 bar) with thermostat 30°C	T2	T2	T2	T2	T2	T2	T2	T2	T2	T2				
			T3 = elect. diff. 800 kPa (8 bar) with thermostat 30°C	T3	T3	T3	T3	T3	T3	T3	T3	T3	T3				
X	X		ACCESSORIES														
			XX = no accessory available	XX	XX	XX	XX	XX	XX	XX	XX	XX	XX				

* Not standard version, please check availability with our Customer Service

** When the filter is ordered with FKM seals, the first digit of the indicator code is a letter (please see Clogging Indicator Chapter for further details)

FPB-MHT
PRESSURE FILTERS

SPARE PARTS ELEMENTS

FILTER HOUSING	FILTER ELEMENT	CLOGGING INDICATOR
		
B P B ▢ ▢ ▢ ▢ ▢ ▢ ▢ ■ ■ ▢ ▢ X X	E P B ▢ ▢ ▢ ▢	▢ ▢

SPARE SEAL KIT

	NBR	FKM
FPB11 MHT151	521.0002.2	521.0086.2
FPB12 MHT152	521.0002.2	521.0086.2
FPB13 MHT153	521.0002.2	521.0086.2
FPB21 MHT301	521.0003.2	521.0030.2
FPB22 MHT302	521.0003.2	521.0030.2
FPB31 MHT801	521.0004.2	521.0087.2
FPB32 MHT802	521.0004.2	521.0087.2
FPB33 MHT803	521.0004.2	521.0087.2
FPB34 MHT804	521.0004.2	521.0087.2
FPB35 MHT805	521.0004.2	521.0087.2



INSTALLATION DRAWING

FPB1

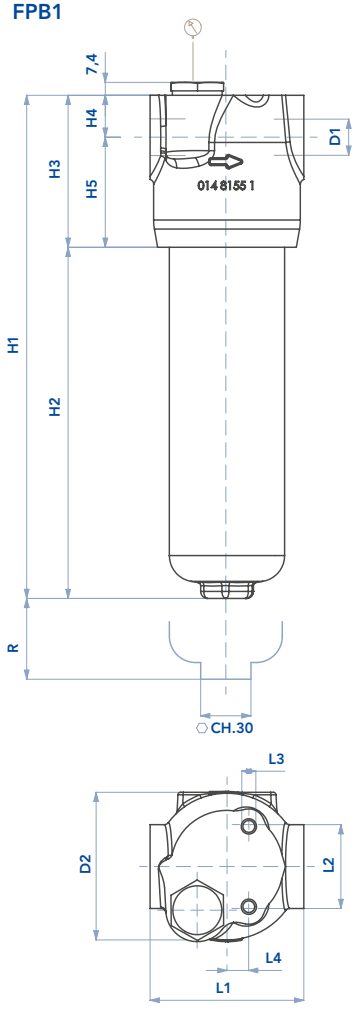

FPB2

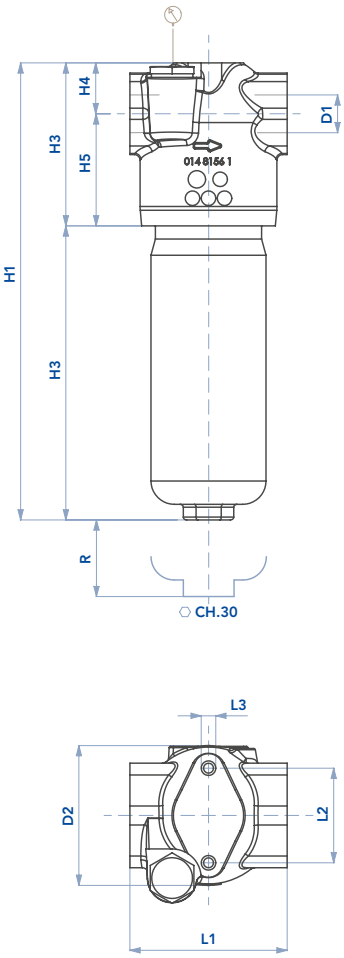

FPB 31-32-33

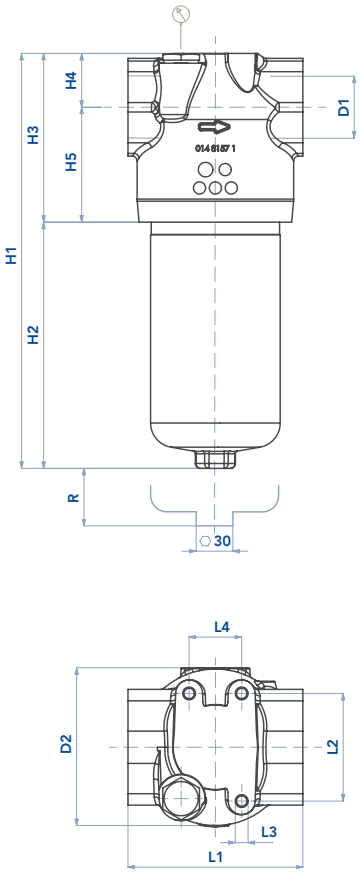

FPB 34-35

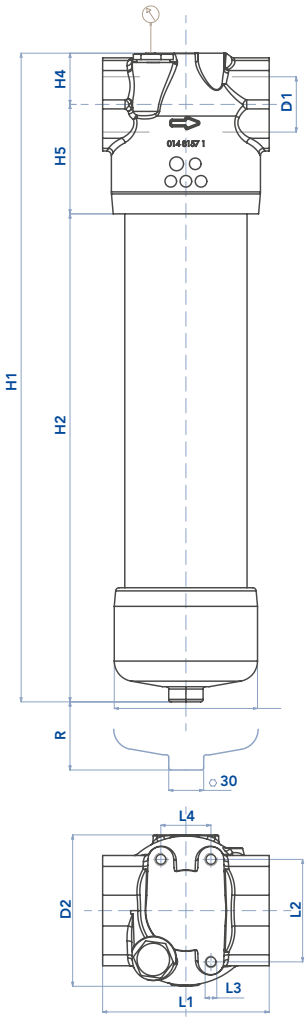

FILTER HOUSING

	D1	D2	H1	H2	H3	H4	H5	L1	L2	L3	L4	R	Kg
FPB11 MHT151	1/2"-3/4"	86	166	79	87	24	63	88	46	M8	12,5	100	4,4
FPB12 MHT152	1/2"-3/4"	86	196	109	87	24	63	88	46	M8	12,5	100	4,6
FPB13 MHT153	1/2"-3/4"	86	296	209	87	24	63	88	46	M8	12,5	100	5,2
FPB21 MHT301	3/4" - 1"	94	226	116	112	35	77	108	65	M8	-	100	6,6
FPB22 MHT302	3/4" - 1"	94	317	207	112	35	77	108	65	M8	-	100	8,2
FPB31 MHT801	1" - 1"1/4 - 1"1/2	128	245	107	138	44	94	143	88	M10	43	100	11,0
FPB32 MHT802	1" - 1"1/4 - 1"1/2	128	337	199	138	44	94	143	88	M10	43	100	13,9
FPB33 MHT803	1" - 1"1/4 - 1"1/2	128	457	319	138	44	94	143	88	M10	43	100	17,2
FPB34 MHT804	1" - 1"1/4 - 1"1/2	128	558	420	138	44	94	143	88	M10	43	100	22,0
FPB35 MHT805	1" - 1"1/4 - 1"1/2	128	658	520	138	44	94	143	88	M10	43	100	25,0

FPB-MHT
PRESSURE FILTERS



MAINTENANCE

The best time to change your filter element is just before it reaches its maximum dirt-holding capacity. For this reason, we recommend to monitor the pressure of the hydraulic oil flowing through the filter with a clogging indicator. When it is time to change the filter element, switch off the system before opening the filter housing and make sure there is no pressure in the filter. Unscrew the bowl and remove the dirty filter element. Replace it with an original UFI element, verifying the part number on the filter label or on the catalogue. Clean the bowl; check the gaskets conditions and replace if necessary. Insert the clean element into his seat, handling with care and cleanliness. Screw the housing until it stops, with a tightening torque of 70 Nm +5/0.
We recommend the stocking of a spare UFI filter element for timely replacement when required.

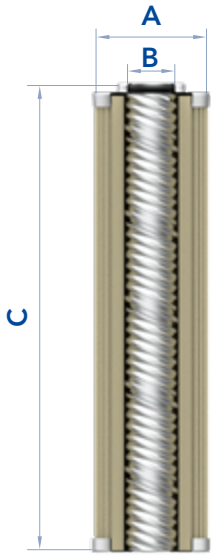



FILTER ELEMENT

	A	B	C	Kg Media F	Kg Media H	AREA (cm²) Media F+	AREA (cm²) Media H+
EPB11 CCH151	45	25	85	0,15	0,25	355	340
EPB12 CCH152	45	25	116	0,20	0,55	500	475
EPB13 CCH153	45	25	211	0,30	0,45	935	915
EPB21 CCH301	52	23,5	115	0,25	0,40	975	975
EPB22 CCH302	52	23,5	210	0,35	0,55	1.830	1.785
EPB31 CCH801	78	42,5	118	0,40	0,70	2.000	1.470
EPB32 CCH802	78	42,5	210	0,80	1,30	3.695	2.695
EPB33 CCH803	78	42,5	330	1,00	1,60	5.025	4.325
EPB34 CCH804	78	42,5	430	1,20	1,80	6.585	5.685
EPB35	78	42,5	530	1,40	2,00	8.145	7.045

The used filter elements cannot be cleaned and are classified as “Dangerous waste material”. They must be disposed according to local laws by authorized Companies.
Verify that the Company you choose has the expertise and authorization to dispose this type of waste material.



PRESSURE DROP CURVES (ΔP)

The “Assembly Pressure Drop (Δp)” is obtained by adding the pressure drop values of the Filter Housing and
of the Clean Filter Element corresponding to the considered Flow Rate and it must be lower than 120 kPa (1,2 bar) and should never exceed 1/3 of the bypass setting.

FILTER HOUSING PRESSURE DROP
(mainly depending on the port size)

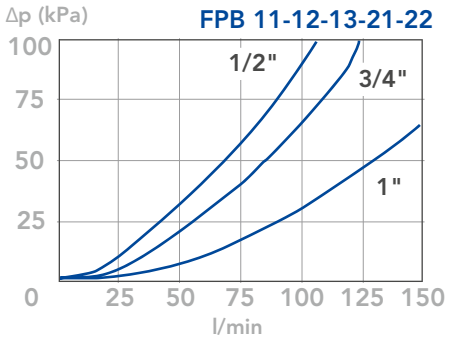

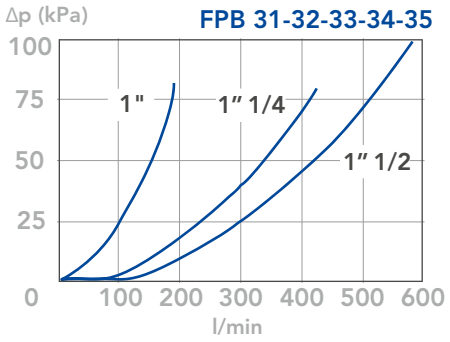

CLEAN FILTER ELEMENT PRESSURE DROP WITH F+ MEDIA
(depending both on the internal diameter of the element and on the filter media)

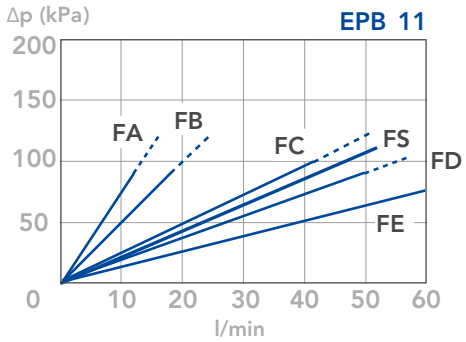

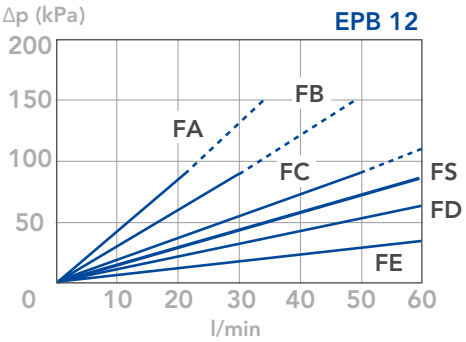

FPB-MHT
PRESSURE FILTERS

CLEAN FILTER ELEMENT PRESSURE DROP WITH F+ MEDIA
(depending both on the internal diameter of the element and on the filter media)

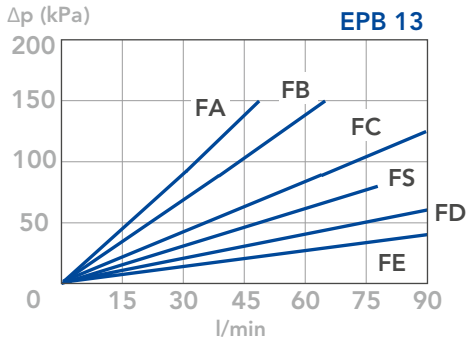

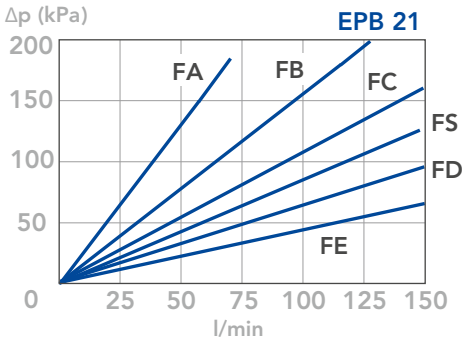

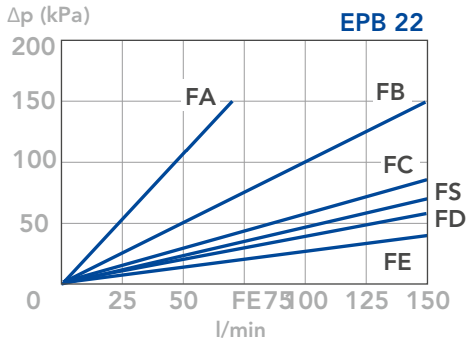

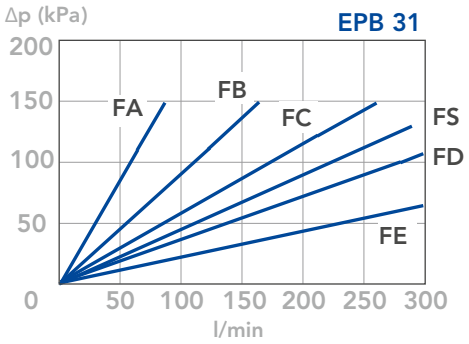

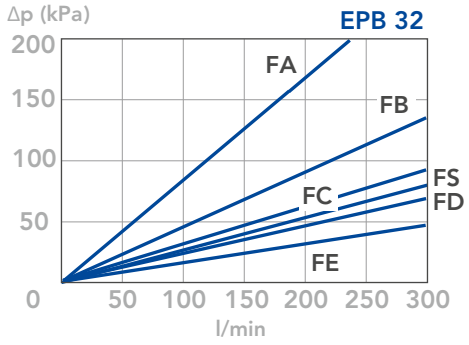

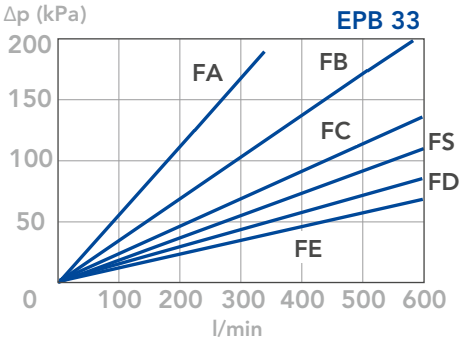

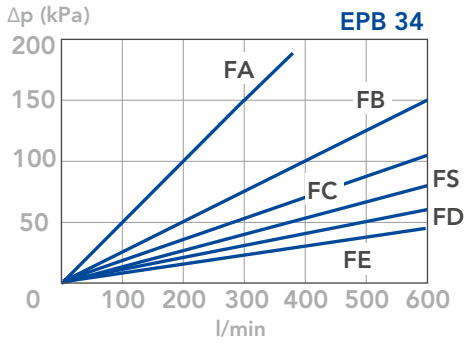

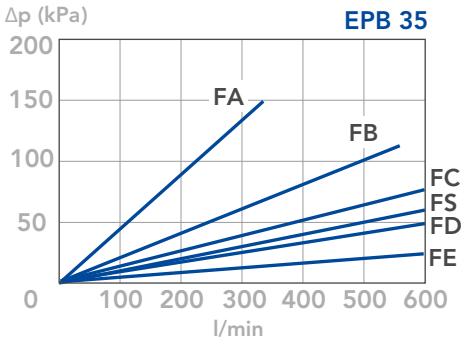



CLEAN FILTER ELEMENT PRESSURE DROP WITH H+ MEDIA
depending both on the internal diameter of the element and on the filter media) - Recommended with no bypass option

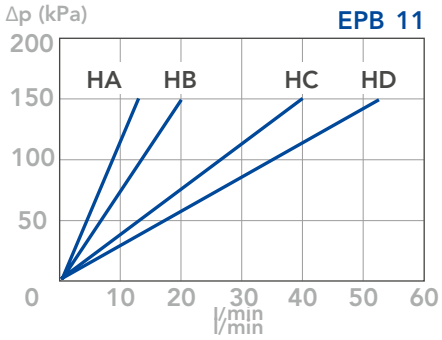

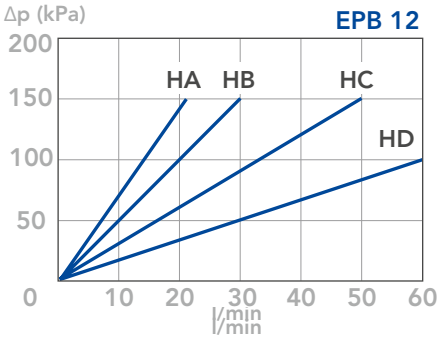

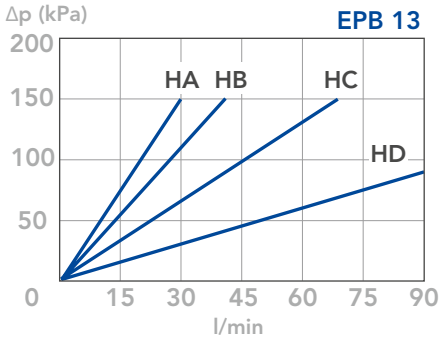

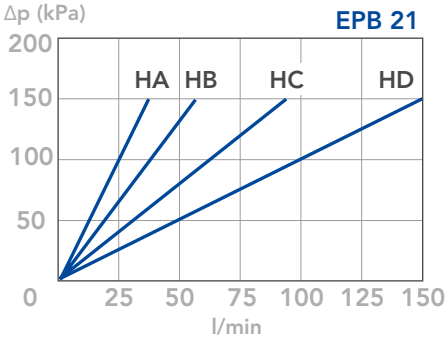

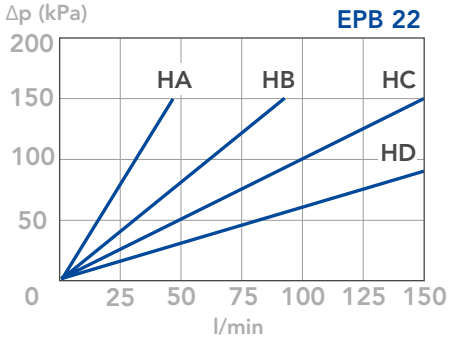

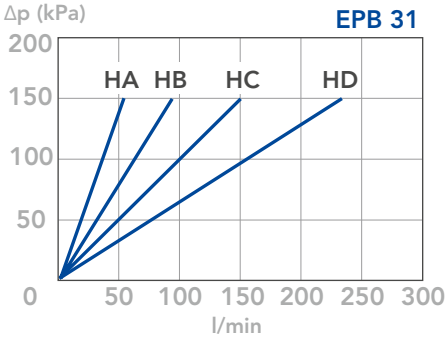

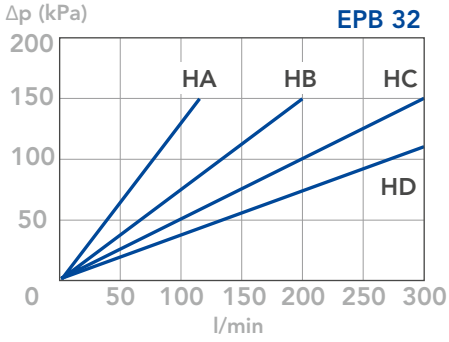

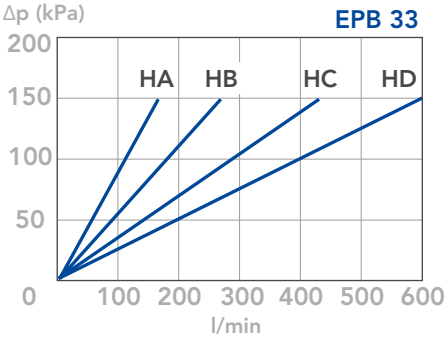

FPB-MHT
PRESSURE FILTERS

CLEAN FILTER ELEMENT PRESSURE DROP WITH H+ MEDIA
depending both on the internal diameter of the element and on the filter media) - Recommended with no bypass option

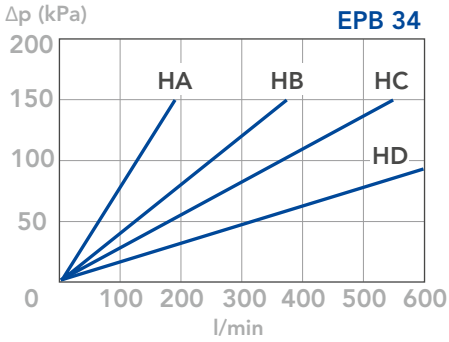

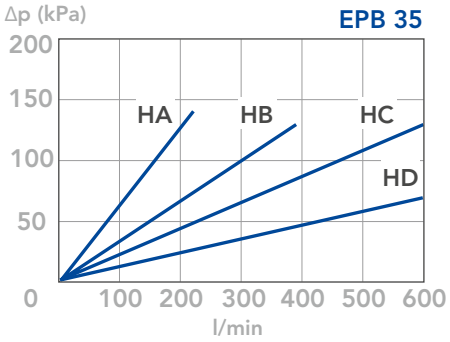

BYPASS VALVE PRESSURE DROP
When selecting the filter size, these curves must be taken into account if it is foreseen that any flow peak is to be absorbed by the bypass valve, it also must be of proper configuration to avoid pressure peaks. The valve pressure drop is directly proportional to fluid specific gravity.

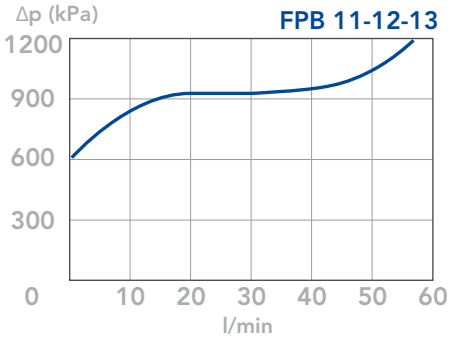

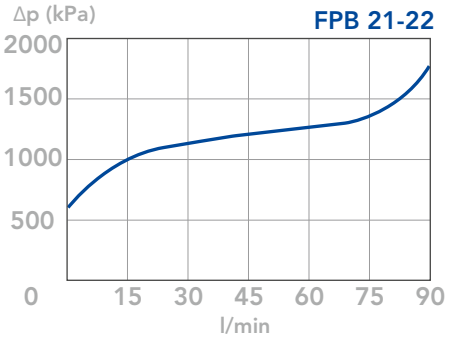

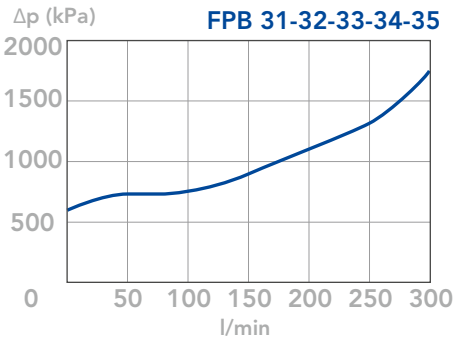

REVERSE FLOW VALVE
For hydraulic systems where reverse flow can occur, the pressure filters series FPB2+ and FPB3+ are available with a free reverse flow valve allowing the fluid to pass through the filter element in the normal direction and to bypass the filter element in the reverse direction (option “R”).
The reverse flow valve is available also with incorporated bypass valve for the normal flow direction, set at 6 bar (option “P”).
In normal flow conditions the whole flow pass through the filter element. In the option “P”, if the differential pressure across the element exceeds 6 bar the bypass is activated.
In reverse flow conditions the flow bypasses the filter element.
Pressure drop through the valve in the reverse direction:
0,4 bar at 100 L/min
0,6 bar at 200 L/min
0,8 bar at 300 L/min

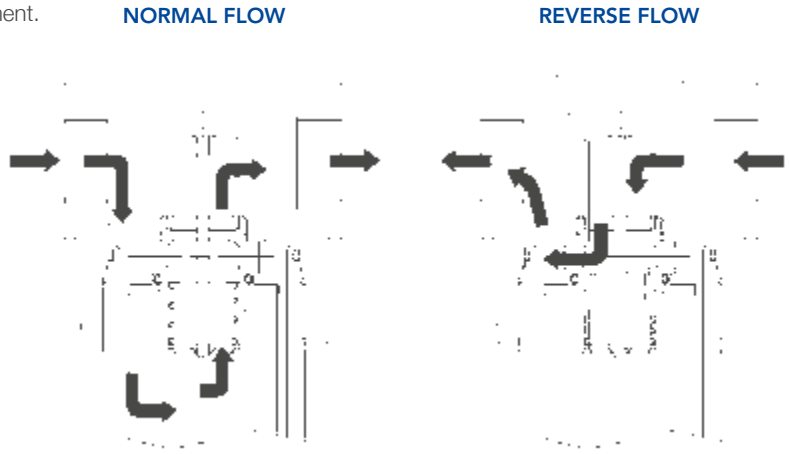

N.B.

All the curves have been obtained with mineral oil having a kinematic viscosity 30 cSt and specific gravity 0,86 Kg/dm3; for fluids with different features, please consider the factors described in the first part of this catalogue. All the curves are obtained from test done at the UFI HYDRAULIC DIVISION Laboratory, according to the specification ISO 3968. In case of discrepancy, please check the contamination level, viscosity and features of the fluid in use.

FPC
PRESSURE FILTERS

MATERIALS

Head: Cast iron
Bowl: Steel
Bypass valve: Steel
Seals: NBR Nitrile
(FKM - on request fluoroelastomer)
Indicator housing: Brass

PRESSURE

Max working: 38,5 MPa (385 bar)
Collapse, differential for the filter element (ISO 2941):
series standard 2 MPa (20 bar)

BYPASS VALVE

Setting:
600 kPa (6 bar) ± 10%
350 kPa (3,5 bar)

WORKING TEMPERATURE

From -25° to +125° C

COMPATIBILITY (ISO 2943)

Full with fluids: HH-HL-HM-HV-HTG
(according to ISO 6743/4)
For fluids different than the above mentioned,
please contact our Customer Service.



HYDRAULIC DIAGRAM

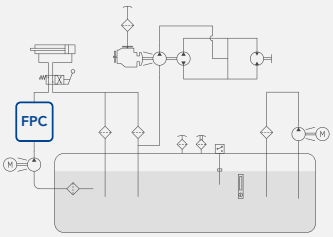

Is this datasheet the latest release? Please check on our website.

FPC
PRESSURE FILTERS

ORDERING AND OPTION CHART

F	P	C	COMPLETE FILTER FAMILY				FILTER ELEMENT FAMILY	E	P	C
			SIZE & LENGHT	51	53	55	SIZE & LENGHT			
			PORT TYPE							
			B = BSP thread	B	B	B				
			M = Metric thread (only M22x1,5)	M	M	M				
			S = SAE thread	S	S	S				
			PORT SIZE							
			04 = 1/2" (N04 not available)	04	04	04				
			06 = 3/4" (F06 not available)	06	06	06				
			08 = 1" (G08 not available; F08 for FPB2 only)	08	08	08				
			BYPASS VALVE							
			W = without	W	W	W				
			C = 600 kPa (6 bar)	C	C	C				
			D = 350 kPa (3,5 bar)	D	D	D				
			SEALS				SEALS			
			N = NBR Nitrile	N	N	N				
			F = FKM Fluoroelastomer	F	F	F				
			FILTER MEDIA				FILTER MEDIA			
			FA = fibreglass 5 µm(c) β>1.000 Δp 2MPa (20 bar)	FA	FA	FA				
			FB = fibreglass 7 µm(c) β>1.000 Δp 2MPa (20 bar)	FB	FB	FB				
			FC = fibreglass 12 µm(c) β>1.000 Δp 2MPa (20 bar)	FC	FC	FC				
			FS = fibreglass 16 µm(c) β>1.000 Δp 2MPa (20 bar)	FS	FS	FS				
			FD = fibreglass 21 µm(c) β>1.000 Δp 2MPa (20 bar)	FD	FD	FD				
			FE = fibreglass 30 µm(c) β>1.000 Δp 2MPa (20 bar)	FE	FE	FE				
			CLOGGING INDICATOR**							
			00 = without predisposition	00	00	00				
			03 = port, plugged	03	03	03				
			5E = visual differential 500 kPa (5 bar)	5E	5E	5E				
			6E = electrical differential 500 kPa (5 bar)	6E	6E	6E				
			7E = indicator 6E with LED	7E	7E	7E				
			XE = electrical differential N.O. 500 kPa (5 bar)	XE	XE	XE				
			XD = electrical differential N.O. 240 kPa (2,4 bar)	XD	XD	XD				
			XL = electrical differential N.C. 300 kPa (3 bar)	XL	XL	XL				
			XG = electrical differential N.C. 340 kPa (3,4 bar)	XG	XG	XG				
			T2 = elect. diff. 500 kPa (5 bar) with thermostat 30°C	T2	T2	T2				
			ACCESSORIES							
			W = without clogging indicator predisposition	W	W	W				
			A = lateral indicator port (see DWG)	A	A	A				
			C = indicator port on the top (see DWG)	C	C	C				
			ACCESSORIES							
			X = no accessory available	X	X	X				

SPARE PARTS ELEMENTS

FILTER HOUSING	FILTER ELEMENT	CLOGGING INDICATOR
		
B P C	E P C	



SPARE SEAL KIT

	NBR	FKM
FPC5	521.0131.2	521.0132.2

**When the filter is ordered with FKM seals, the first digit of the indicator code is a letter
(please see Clogging Indicator Chapter for further details)

INSTALLATION DRAWING

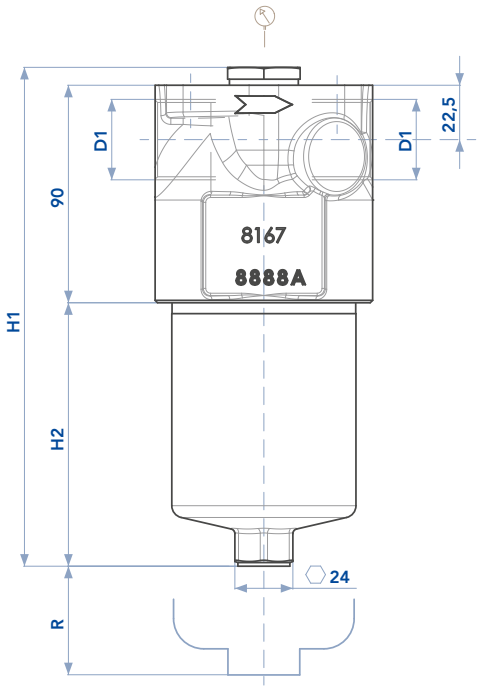

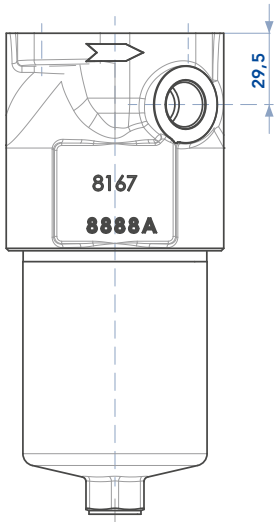

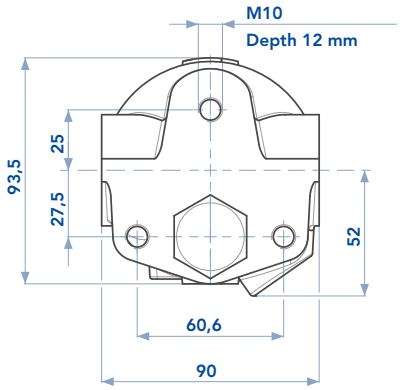

OPTION "C"

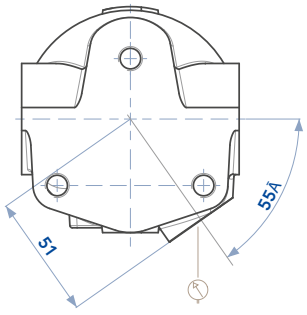

OPTION "A"

FILTER HOUSING

	D1	H1	H2	Kg
FPC51	M22x1,5 - 1/2" - 3/4" - 1" BSP or SAE thread	206,5	109,0	4,2
FPC53	M22x1,5 - 1/2" - 3/4" - 1" BSP or SAE thread	254,5	157,0	4,7
FPC55	M22x1,5 - 1/2" - 3/4" - 1" BSP or SAE thread	307,0	209,5	5,3

FPC
PRESSURE FILTERS

MAINTENANCE

The best time to change your filter element is just before it reaches its maximum dirt-holding capacity. For this reason, we recommend to monitor the pressure of the hydraulic oil flowing through the filter with a clogging indicator. When it is time to change the filter element, switch off the system before opening the filter housing and make sure there is no pressure in the filter. Unscrew the bowl and remove the dirty filter element. Replace it with an original UFI element, verifying the part number on the filter label or on the catalogue. Clean the bowl; check the gaskets conditions and replace if necessary. Insert the clean element into his seat, handling with care and cleanliness. Screw the housing until it stops, with a tightening torque of 70 Nm +5/0.
We recommend the stocking of a spare UFI filter element for timely replacement when required.

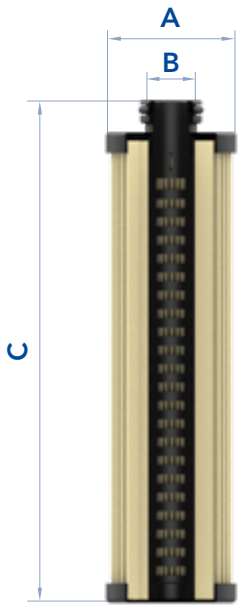

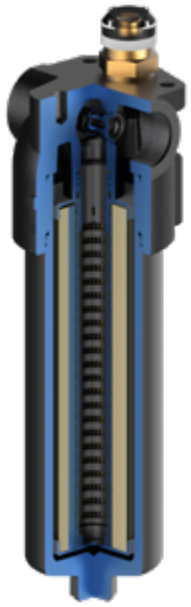

FILTER ELEMENT

	A	B	C	Kg Media F+	AREA (cm²) Media F+
EPC51	56,5	18	118	0,12	945
EPC53	56,5	18	166	0,15	1.401
EPC55	56,5	18	219	0,19	1.905

The used filter elements cannot be cleaned and are classified as “Dangerous waste material”. They must be disposed according to local laws by authorized Companies.
Verify that the Company you choose has the expertise and authorization to dispose this type of waste material.



PRESSURE DROP CURVES (ΔP)

The “Assembly Pressure Drop (Δp)” is obtained by adding the pressure drop values of the Filter Housing and of the Clean Filter Element corresponding to the considered Flow Rate and it must be lower than 120 kPa (1,2 bar) and should never exceed 1/3 of the bypass valve setting.

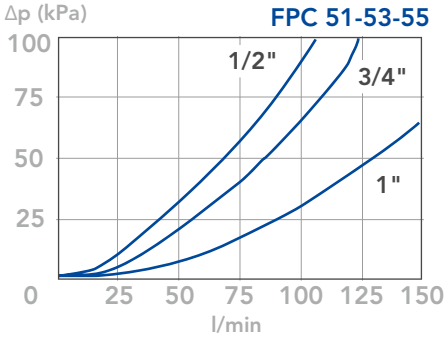

CLEAN FILTER ELEMENT PRESSURE DROP WITH F+ MEDIA
(depending both on the internal diameter of the element and on the filter media)

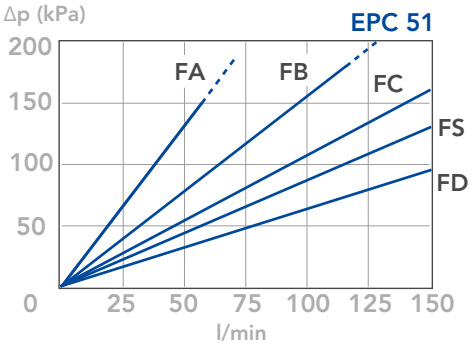

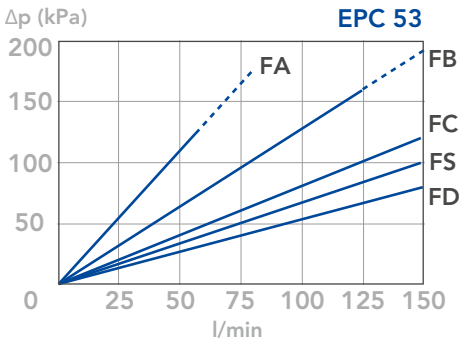

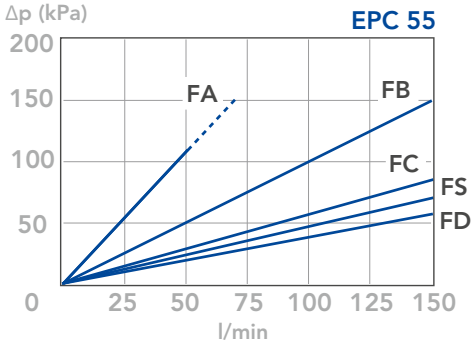

BYPASS VALVE PRESSURE DROP
When selecting the filter size, these curves must be taken into account if it is foreseen that any flow peak is to be absorbed by the bypass valve, it also must be of proper configuration to avoid pressure peaks. The valve pressure drop is directly proportional to fluid specific gravity.

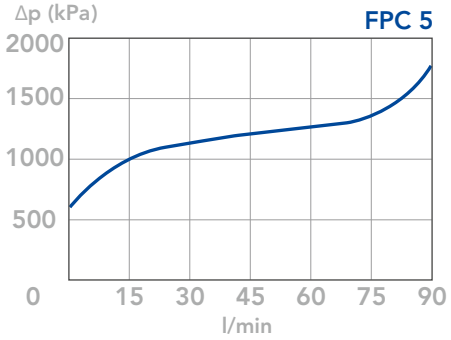

N.B.

All the curves have been obtained with mineral oil having a kinematic viscosity 30 cSt and specific gravity 0,86 Kg/dm3; for fluids with different features, please consider the factors described in the first part of this catalogue. All the curves are obtained from test done at the UFI HYDRAULIC DIVISION Laboratory, according to the specification ISO 3968. In case of discrepancy, please check the contamination level, viscosity and features of the fluid in use.



FPD-MDF
PRESSURE FILTERS

MATERIALS

Head: Cast iron
Bowl: Steel
Seals: NBR Nitrile
(FKM - on request fluoroelastomer)
Indicator housing: Brass

PRESSURE

Max working: 31,5 MPa (315 bar)
Collapse, differential for the filter element (ISO 2941):
21 MPa (210 bar)

WORKING TEMPERATURE

From -25° to +110° C

COMPATIBILITY (ISO 2943)

Full with fluids: HH-HL-HM-HV-HTG
(according to ISO 6743/4)
For fluids different than the above mentioned,
please contact our Customer Service.



HYDRAULIC DIAGRAM

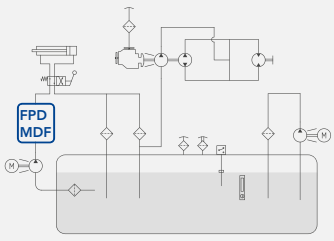

Is this datasheet the latest release? Please check on our website.

FPD
PRESSURE FILTERS

ORDERING AND OPTION CHART

F	P	D	COMPLETE FILTER FAMILY										FILTER ELEMENT FAMILY	E	P	B
			SIZE & LENGHT	01	02	12	21	22	31	32	33	34				
				01	12	12	21	22	31	32	33	34	SIZE & LENGHT			
			PORT TYPE													
			C = CETOP interface	C	C	C	C	C	C	C	C	C				
			Y = bowl side B	Y	Y	-	-	-	-	-	-	-				
			PORT SIZE													
			03 = CETOP 3 (size 6)	03	03	-	-	-	-	-	-	-				
			05 = CETOP 5 (size 10)	-	-	05	-	-	-	-	-	-				
			07 = CETOP 7 (size 16)	-	-	-	07	07	-	-	-	-				
			30 = size 30	-	-	-	-	-	30	30	30	30				
		X	BYPASS VALVE													
			X = not available	X	X	X	X	X	X	X	X	X				
			SEALS										SEALS			
			N = NBR Nitrile	N	N	N	N	N	N	N	N	N				
			F = FKM Fluoroelastomer	F	F	F	F	F	F	F	F	F				
			FILTER MEDIA										FILTER MEDIA			
			HA = fibreglass 5 µm(c) β>1.000 Δp 21MPa (210 bar)	HA	HA	HA	HA	HA	HA	HA	HA	HA				
			HB = fibreglass 7 µm(c) β>1.000 Δp 21MPa (210 bar)	HB	HB	HB	HB	HB	HB	HB	HB	HB				
			HC = fibreglass 12 µm(c) β>1.000 Δp 21MPa (210 bar)	HC	HC	HC	HC	HC	HC	HC	HC	HC				
			HD = fibreglass 21 µm(c) β>1.000 Δp 21MPa (210 bar)	HD	HD	HD	HD	HD	HD	HD	HD	HD				
			CLOGGING INDICATOR**													
			03 = port, plugged	03	03	03	03	03	03	03	03	03				
			5F = visual differential 800 kPa (8 bar)	5F	5F	5F	5F	5F	5F	5F	5F	5F				
			6F = electrical differential 800 kPa (8 bar)	6F	6F	6F	6F	6F	6F	6F	6F	6F				
			7F = indicator 6F with LED	7F	7F	7F	7F	7F	7F	7F	7F	7F				
			T3 = elect. diff. 800 kPa (8 bar) with thermostat 30°C	T3	T3	T3	T3	T3	T3	T3	T3	T3				
X	X		ACCESSORIES													
			XX = no accessory available	XX	XX	XX	XX	XX	XX	XX	XX	XX				

SPARE PARTS ELEMENTS

FILTER HOUSING	FILTER ELEMENT	CLOGGING INDICATOR
		
B P D X X X	E P B	



MDF
PRESSURE FILTERS

ORDERING AND OPTION CHART

M	D	F	COMPLETE FILTER FAMILY				FILTER ELEMENT FAMILY	C	C	H
			SIZE & LENGHT	003	005	007				
				003	152	302	SIZE & LENGHT			
			FILTER MEDIA				FILTER MEDIA			
			2T = fibreglass 5 µm(c) β>1.000 Δp 21MPa (210 bar)	2T	2T	2T				
			2C = fibreglass 7 µm(c) β>1.000 Δp 21MPa (210 bar)	2C	2C	2C				
			2D = fibreglass 12 µm(c) β>1.000 Δp 21MPa (210 bar)	2D	2D	2D				
			2V = fibreglass 21 µm(c) β>1.000 Δp 21MPa (210 bar)	2V	2V	2V				
			SEALS				SEALS			
			1 = NBR 1itrile	1	1	1				
			2 = FKM Fluoroelastomer	2	2	2				
		0	BYPASS VALVE							
			0 = not available	0	0	0				
			PORT TYPE							
			C = CETOP	C	C	C				
			Y = Bowl on side B	Y	-	-				
			PORT SIZE							
			3 = CETOP 3	3	-	-				
			5 = CETOP 5	-	5	-				
			7 = CETOP 7	-	-	7				
			CLOGGING INDICATOR**							
			03 = port, plugged	03	03	03				
			5F = visual differential 800 kPa (8 bar)	5F	5F	5F				
			6F = electrical differential 800 kPa (8 bar)	6F	6F	6F				
			7F = indicator 6F with LED	7F	7F	7F				
			T3 = elect. diff. 800 kPa (8 bar) with thermostat 30°C	T3	T3	T3				
X	X		ACCESSORIES							
			XX = no accessory available	XX	XX	XX				

SPARE SEAL KIT

	NBR	FKM
FPD01 MDF003	521.0005.2	521.0073.2
FPD02 MDF005	521.0107.2	521.0108.2
FPD12 MDF007	521.0071.2	521.0074.2
FPD21	521.0072.2	521.0028.2
FPD22	521.0072.2	521.0028.2
FPD31	521.0109.2	521.0110.2
FPD32	521.0109.2	521.0110.2
FPD33	521.0109.2	521.0110.2
FPD34	521.0109.2	521.0110.2

** When the filter is ordered with FKM seals, the first digit of the indicator code is a letter
(please see Clogging Indicator Chapter for further details)

FPD-MDF
PRESSURE FILTERS

INSTALLATION DRAWING

FPD 01 weight KG. 2.5

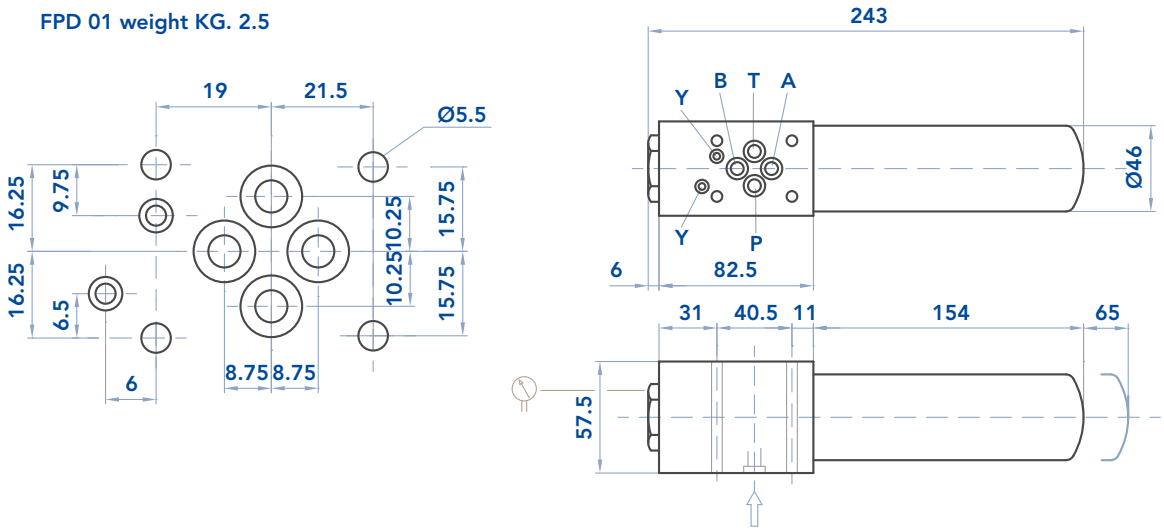

FPD 02 weight KG. 2.5

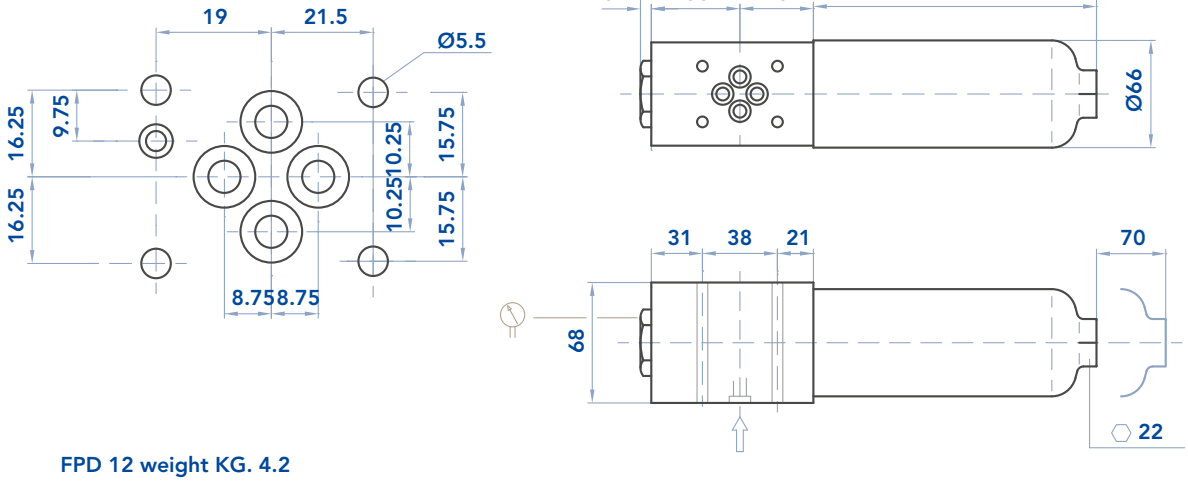

FPD 12 weight KG. 4.2

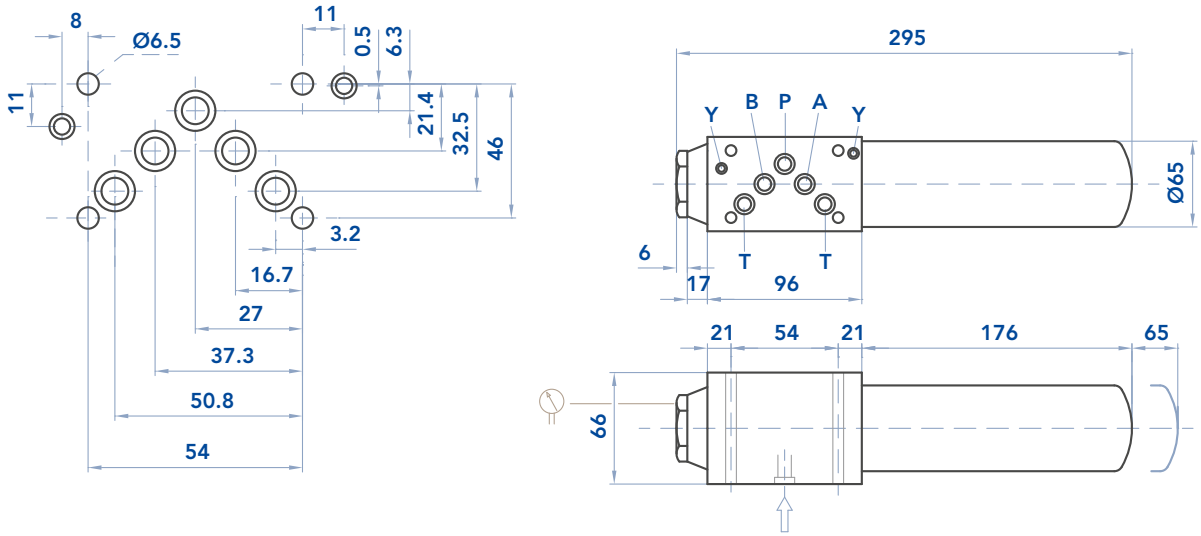



INSTALLATION DRAWING

FPD 21 weight KG. 4 - FPD 22 weight KG. 5.5

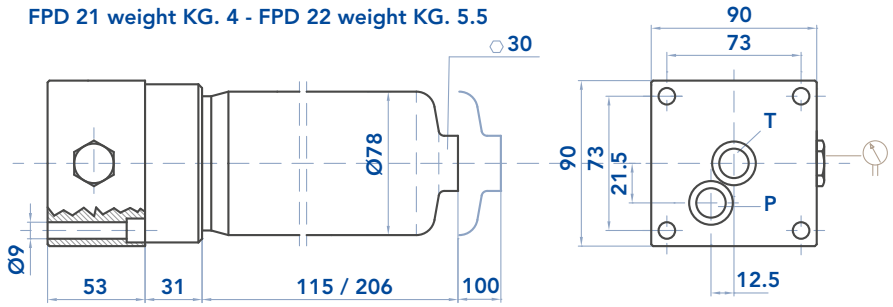

FPD 31 - 32 33 - 34

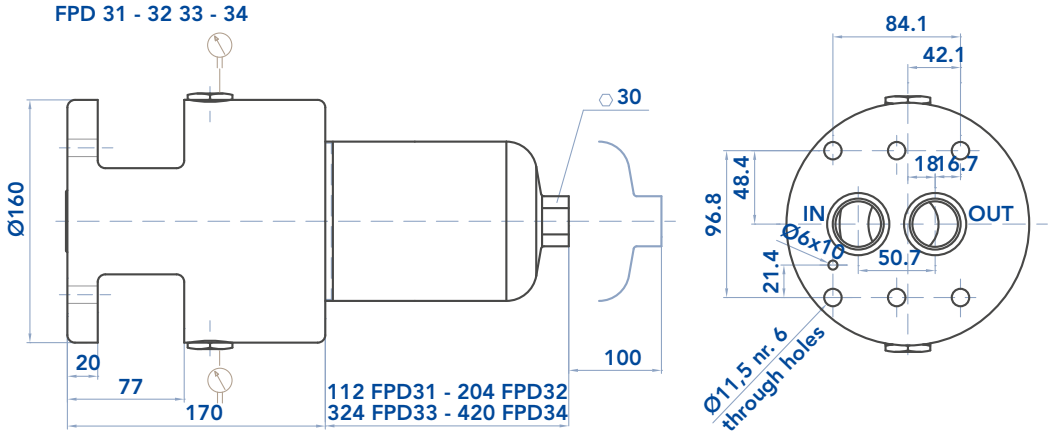

FPD-MDF
PRESSURE FILTERS

MAINTENANCE

The best time to change your filter element is just before it reaches its maximum dirt-holding capacity. For this reason, we recommend to monitor the pressure of the hydraulic oil flowing through the filter with a clogging indicator. When it is time to change the filter element, switch off the system before opening the filter housing and make sure there is no pressure in the filter. Unscrew the bowl and remove the dirty filter element. Replace it with an original UFI element, verifying the part number on the filter label or on the catalogue. Clean the bowl; check the gaskets conditions and replace if necessary. Insert the clean element into his seat, handling with care and cleanliness. Screw the housing until it stops, with a tightening torque of 70 Nm +5/0.
We recommend the stocking of a spare UFI filter element for timely replacement when required.

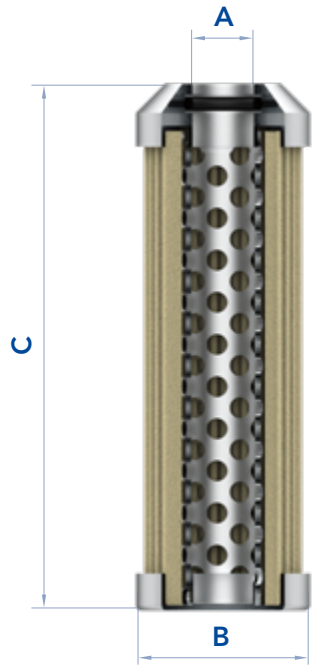



FILTER ELEMENT

	A	B	C	Kg	AREA (cm²) Media H+
EPB01 CCH003	16	33	100	0,14	270
EPB12 CCH152	25	45	116	0,55	475
EPB21 CCH301	23,5	52	115	0,40	975
EPB22 CCH302	23,5	52	210	0,55	1.785
EPB31 CCH801	42,5	78	118	0,70	1.470
EPB32 CCH802	42,5	78	210	1,30	2.695
EPB33 CCH803	42,5	78	330	1,60	4.325
EPB34 CCH804	42,5	78	430	1,80	5.685

The used filter elements cannot be cleaned and are classified as “Dangerous waste material”. They must be disposed according to local laws by authorized Companies.
Verify that the Company you choose has the expertise and authorization to dispose this type of waste material.

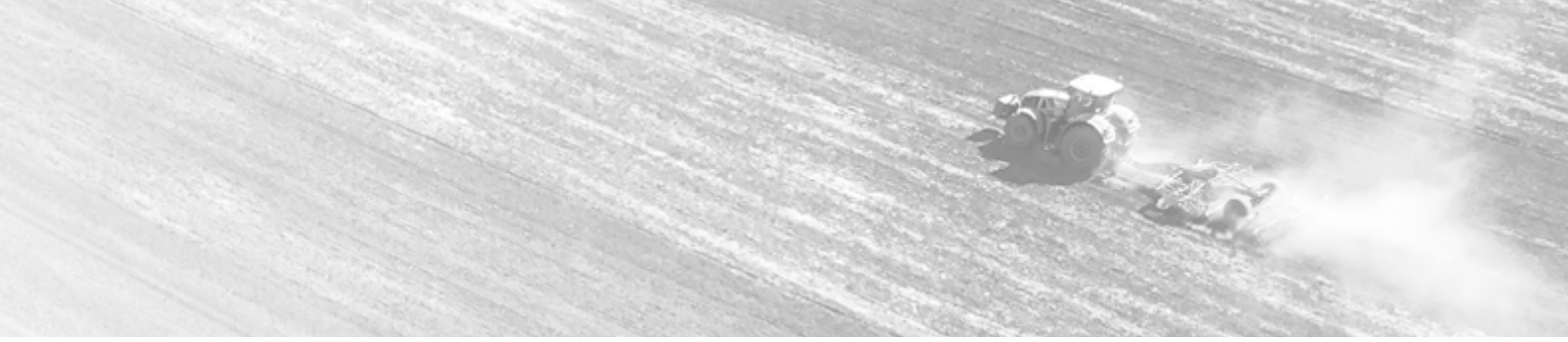

PRESSURE DROP CURVES (ΔP)

The “Assembly Pressure Drop (Δp)” is obtained by adding the pressure drop values of the Filter Housing and of the Clean Filter Element corresponding to the considered Flow Rate and it must be lower than 120 kPa (1,2 bar) and should never exceed 1/3 of the bypass valve setting

FILTER HOUSING PRESSURE DROP
(mainly depending on the port size)

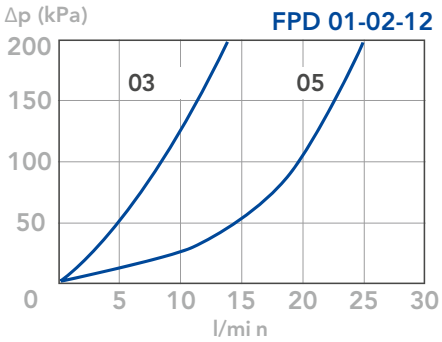

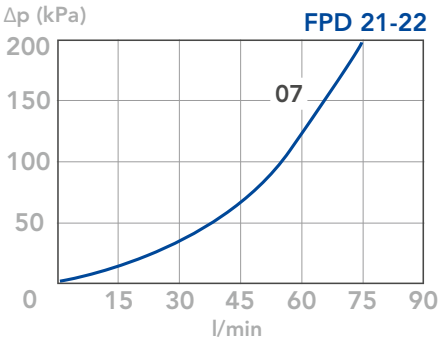

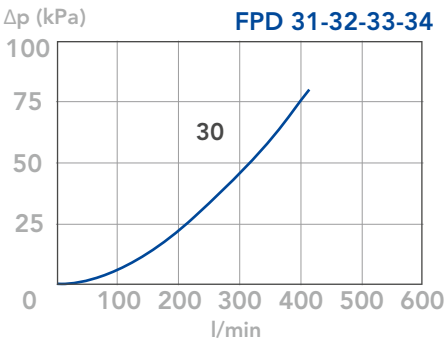

N.B.

All the curves have been obtained with mineral oil having a kinematic viscosity 30 cSt and specific gravity 0,86 Kg/dm3; for fluids with different features, please consider the factors described in the first part of this catalogue. All the curves are obtained from test done at the UFI HYDRAULIC DIVISION Laboratory, according to the specification ISO 3968. In case of discrepancy, please check the contamination level, viscosity and features of the fluid in use.

FPD-MDF
PRESSURE FILTERS

CLEAN FILTER ELEMENT PRESSURE DROP WITH H+ MEDIA
(depending both on the internal diameter of the element and on the filter media)

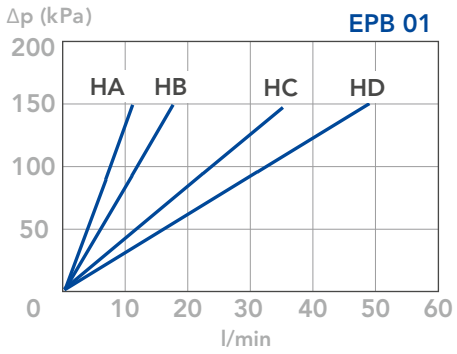

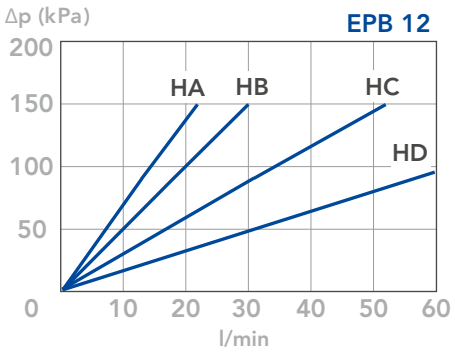

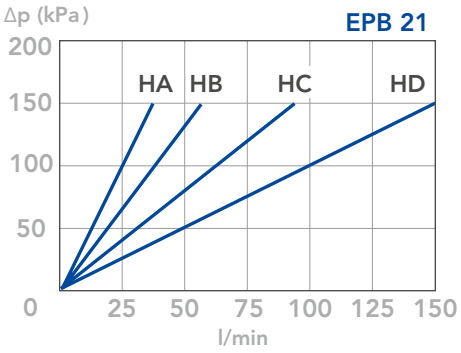

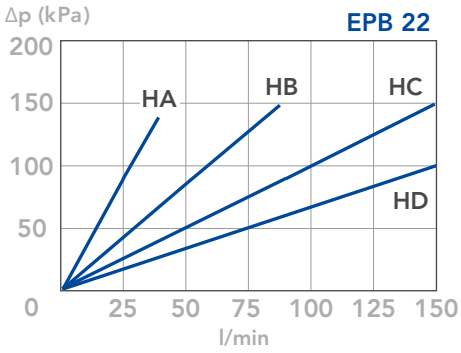

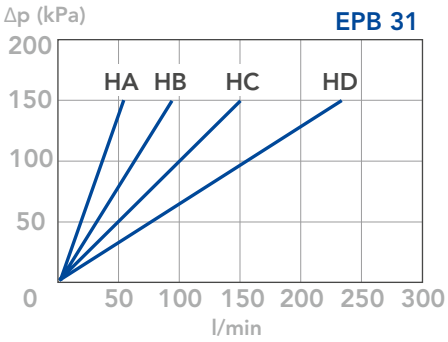

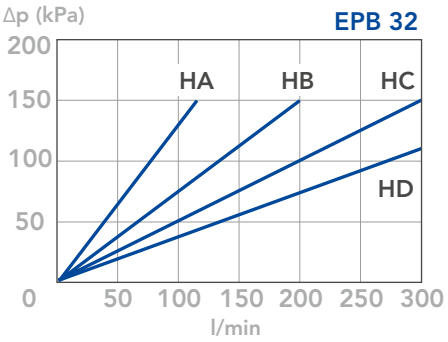

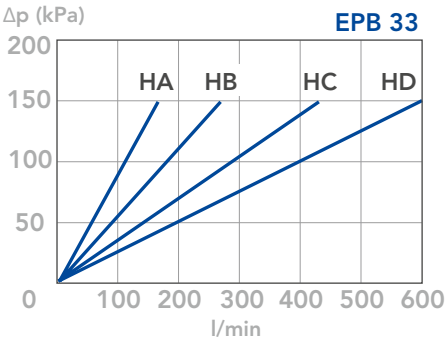

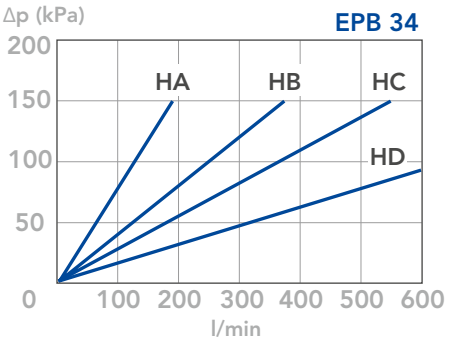

N.B.

All the curves have been obtained with mineral oil having a kinematic viscosity 30 cSt and specific gravity 0,86 Kg/dm3; for fluids with different features, please consider the factors described in the first part of this catalogue. All the curves are obtained from test done at the UFI HYDRAULIC DIVISION Laboratory, according to the specification ISO 3968. In case of discrepancy, please check the contamination level, viscosity and features of the fluid in use.

FPE-AMF-AMD

PRESSURE FILTERS

MATERIALS

Head: Aluminium alloy
Spin-on cartridge: Steel
Bypass valve: Polyammide
Seals: NBR Nitrile
(FKM - on request fluoroelastomer)
Indicator housing: Brass

PRESSURE

Max working: 1,2 MPa (12 bar)
Collapse, differential for the filter element (ISO 2941):
400 kPa (4 bar)

BYPASS VALVE

Setting: 170 kPa (1,7 bar) ± 10%

WORKING TEMPERATURE

From -25° to +110° C

COMPATIBILITY (ISO 2943)

Full with fluids: HH-HL-HM-HR-HV-HTG
(according to ISO 6743/4)
For fluids different than the above mentioned,
please contact our Customer Service.



HYDRAULIC DIAGRAM

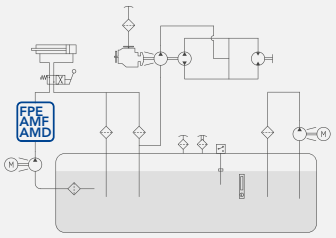

Is this datasheet the latest release? Please check on our website.



FPE
PRESSURE FILTERS

ORDERING AND OPTION CHART

F	P	E	COMPLETE FILTER FAMILY									FILTER ELEMENT FAMILY	E	S	E
			SIZE & LENGHT	11	12	21	22	31*	32*	41*	42*	SIZE & LENGHT			
			PORT TYPE												
			B = BSP thread	B	B	B	B	B	B	B	B				
			F = SAE flange 3000 psi	-	-	-	-	-	-	F	F				
			PORT SIZE												
			06 = 3/4"	06	06	-	-	-	-	-	-				
			10 = 1" 1/4	-	-	10	10	-	-	-	-				
			12 = 1" 1/2	-	-	-	-	12	12	12	12				
			BYPASS VALVE												
			W = without	W	W	W	W	W	W	W	W				
			B = 170 kPa (1,7 bar)	B	B	B	B	B	B	B	B				
			SEALS									SEALS			
			N = NBR Nitrile	N	N	N	N	N	N	N	N				
			F = FKM Fluoroelastomer	F	F	F	F	F	F	F	F				
			FILTER MEDIA									FILTER MEDIA			
			FA = fibreglass 5 µm(c) β>1.000	FA	FA	FA	FA	FA	FA	FA	FA				
			FB = fibreglass 7 µm(c) β>1.000	FB	FB	FB	FB	FB	FB	FB	FB				
			FC = fibreglass 12 µm(c) β>1.000	FC	FC	FC	FC	FC	FC	FC	FC				
			FD = fibreglass 21 µm(c) β>1.000	FD	FD	FD	FD	FD	FD	FD	FD				
			CC = impregnated cellulose 10 µm β>2	CC	CC	CC	CC	CC	CC	CC	CC				
			CD = impregnated cellulose 25 µm β>2	CD	CD	CD	CD	CD	CD	CD	CD				
			CLOGGING INDICATOR												
			06 = port, plugged	06	06	06	06	06	06	06	06				
			31 = pressure gauge, rear connection	31	31	31	31	31	31	31	31				
			P1 =SPDT, pressure switch	P1	P1	P1	P1	P1	P1	P1	P1				
X	X		ACCESSORIES												
			XX = no accessory available	XX	XX	XX	XX	XX	XX	XX	XX				

SPARE PARTS ELEMENTS

FILTER HOUSING	FILTER ELEMENT	CLOGGING INDICATOR
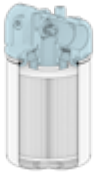		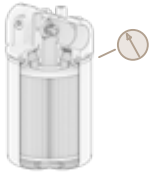
B P E	E S E	



AMF
PRESSURE FILTERS

ORDERING AND OPTION CHART

A	M	F	COMPLETE FILTER FAMILY									FILTER ELEMENT FAMILY	C	C	A
			SIZE & LENGHT	151	152	301	302	601*	602*	801*	802*	SIZE & LENGHT			
			FILTER MEDIA									FILTER MEDIA			
			FT = fibreglass 5 µm(c) β>1.000	FT	FT	FT	FT	FT	FT	FT	FT				
			FC = fibreglass 7 µm(c) β>1.000	FC	FC	FC	FC	FC	FC	FC	FC				
			FD = fibreglass 12 µm(c) β>1.000	FD	FD	FD	FD	FD	FD	FD	FD				
			FV = fibreglass 21 µm(c) β>1.000	FV	FV	FV	FV	FV	FV	FV	FV				
			CD = impregnated cellulose 10 µm(c) β>2	CD	CD	CD	CD	CD	CD	CD	CD				
			CV = impregnated cellulose 25 µm(c) β>2	CV	CV	CV	CV	CV	CV	CV	CV				
			SEALS									SEALS			
			1 = NBR 1itrile	1	1	1	1	1	1	1	1				
			2 = FKM Fluoroelastomer	2	2	2	2	2	2	2	2				
			BYPASS VALVE												
			S = without	S	S	S	S	S	S	S	S				
			B = 170 kPa (1,7 bar)	B	B	B	B	B	B	B	B				
			PORT TYPE												
			B = BSP thread	B	B	B	B	B	B	B	B				
			F = SAE flange 3000 psi	-	-	F	F	F	F	F	F				
			PORT SIZE												
			4 = 3/4"	4	4	-	-	-	-	-	-				
			6 = 1" 1/4	-	-	6	6	-	-	-	-				
			7 = 1" 1/2	-	-	-	-	7	7	7	7				
			CLOGGING INDICATOR												
			06 = port, plugged	06	06	06	06	06	06	06	06				
			31 = pressure gauge, rear connection	31	31	31	31	31	31	31	31				
			P1 =SPDT, pressure switch	P1	P1	P1	P1	P1	P1	P1	P1				
X	X		ACCESSORIES												
			XX = no accessory available	XX	XX	XX	XX	XX	XX	XX	XX				

NOTE

* When ordering the filter elements, please consider the following information:
ESE31 = 2 x ESE21
ESE32 = 2 x ESE22
ESE41 = 2 x ESE21
ESE42 = 2 x ESE22
CCA601 = 2 X CCA301
CCA602 = 2 X CCA302
CCA801 = 2 X CCA301
CCA802 = 2 X CCA302

FPE
PRESSURE FILTERS

ORDERING AND OPTION CHART - VERSION WITH DIFFERENTIAL INDICATOR

F	P	E	COMPLETE FILTER FAMILY									FILTER ELEMENT FAMILY	E	S	E
			SIZE & LENGHT	A1*	A2*	B1*	B2*	31*	32*	41*	42*	SIZE & LENGHT			
			PORT TYPE												
			B = BSP thread	B	B	B	B	B	B	B	B				
			F = SAE flange 3000 psi	-	-	-	-	-	-	F	F				
			PORT SIZE												
			06 = 3/4"	06	06	-	-	-	-	-	-				
			10 = 1" 1/4	-	-	10	10	-	-	-	-				
			12 = 1" 1/2	-	-	-	-	12	12	12	12				
			BYPASS VALVE												
			W = without	W	W	W	W	W	W	W	W				
			B = 170 kPa (1,7 bar)	B	B	B	B	B	B	B	B				
			SEALS									SEALS			
			N = NBR Nitrile	N	N	N	N	N	N	N	N				
			F = FKM Fluoroelastomer	F	F	F	F	F	F	F	F				
			FILTER MEDIA									FILTER MEDIA			
			FA = fibreglass 5 µm(c) β>1.000	FA	FA	FA	FA	FA	FA	FA	FA				
			FB = fibreglass 7 µm(c) β>1.000	FB	FB	FB	FB	FB	FB	FB	FB				
			FC = fibreglass 12 µm(c) β>1.000	FC	FC	FC	FC	FC	FC	FC	FC				
			FD = fibreglass 21 µm(c) β>1.000	FD	FD	FD	FD	FD	FD	FD	FD				
			CC = impregnated cellulose 10 µm β>2	CC	CC	CC	CC	CC	CC	CC	CC				
			CD = impregnated cellulose 25 µm β>2	CD	CD	CD	CD	CD	CD	CD	CD				
			CLOGGING INDICATOR**												
			03 = port, plugged	-	-	-	-	03	03	03	03				
			5B = visual differential 130 kPa (1,3 bar)	-	-	-	-	5B	5B	5B	5B				
			6B = electrical differential 130 kPa (1,3 bar)	-	-	-	-	6B	6B	6B	6B				
			7B = indicator 6B with LED	-	-	-	-	7B	7B	7B	7B				
			T0 = elect. diff. 130 kPa (1,3 bar) with thermostat 30°C	-	-	-	-	T0	T0	T0	T0				
			0U = ports, plugged	0U	0U	0U	0U	-	-	-	-				
			U0 = visual differential 130 kPa (1,3 bar)	U0	U0	U0	U0	-	-	-	-				
			N0 = visual-electrical differential 130 kPa (1,3 bar)	N0	N0	N0	N0	-	-	-	-				
X	X		ACCESSORIES												
			XX = no accessory available	XX	XX	XX	XX	XX	XX	XX	XX				

SPARE PARTS ELEMENTS

FILTER HOUSING	FILTER ELEMENT	CLOGGING INDICATOR
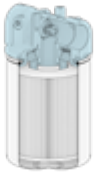		
B P E	E S E	



AMD
PRESSURE FILTERS

ORDERING AND OPTION CHART - VERSION WITH DIFFERENTIAL INDICATOR

A	M	D	COMPLETE FILTER FAMILY									FILTER ELEMENT FAMILY	C	C	A
			SIZE & LENGHT	151	152	301	302	601*	602*	801*	802*	SIZE & LENGHT			
			FILTER MEDIA									FILTER MEDIA			
			FT = fibreglass 5 µm(c) β>1.000	FT	FT	FT	FT	FT	FT	FT	FT				
			FC = fibreglass 7 µm(c) β>1.000	FC	FC	FC	FC	FC	FC	FC	FC				
			FD = fibreglass 12 µm(c) β>1.000	FD	FD	FD	FD	FD	FD	FD	FD				
			FV = fibreglass 21 µm(c) β>1.000	FV	FV	FV	FV	FV	FV	FV	FV				
			CD = impregnated cellulose 10 µm β>2	CD	CD	CD	CD	CD	CD	CD	CD				
			CV = impregnated cellulose 25 µm β>2	CV	CV	CV	CV	CV	CV	CV	CV				
			SEALS									SEALS			
			1 = NBR Nitrile	1	1	1	1	1	1	1	1				
			2 = FKM Fluoroelastomer	2	2	2	2	2	2	2	2				
			BYPASS VALVE												
			S = without	S	S	S	S	S	S	S	S				
			B = 170 kPa (1,7 bar)	B	B	B	B	B	B	B	B				
			PORT TYPE												
			B = BSP thread	B	B	B	B	B	B	B	B				
			F = SAE flange 3000 psi	-	-	-	-	-	-	F	F				
			PORT SIZE												
			4 = 3/4" (F06 not available)	4	4	-	-	-	-	-	-				
			6 = 1" 1/4 (N10 not available)	-	-	6	6	-	-	-	-				
			7 = 1" 1/2 (G12 option not available)	-	-	-	-	7	7	7	7				
			CLOGGING INDICATOR **												
			03 = port, plugged	-	-	-	-	03	03	03	03				
			5B = visual differential 130 kPa (1,3 bar)	-	-	-	-	5B	5B	5B	5B				
			6B = electrical differential 130 kPa (1,3 bar)	-	-	-	-	6B	6B	6B	6B				
			7B = indicator 6E with LED	-	-	-	-	7B	7B	7B	7B				
			T0 = elect. diff. 130 kPa (1,3 bar) with thermostat 30°C	-	-	-	-	T0	T0	T0	T0				
			0U = ports, plugged	0U	0U	0U	0U	-	-	-	-				
			U0 = visual differential 130 kPa (1,3 bar)	U0	U0	U0	U0	-	-	-	-				
			N0 = visual-electrical differential 130 kPa (1,3 bar)	N0	N0	N0	N0	-	-	-	-				
X	X		ACCESSORIES												
			XX = no accessory available	XX	XX	XX	XX	XX	XX	XX	XX				

NOTE

* When ordering the filter elements, please consider the following information:

ESEA1 = ESE11
ESEA2 = ESE12
ESEB1 = ESE21
ESEB2 = ESE22
ESE31 = 2 x ESE21
ESE32 = 2 x ESE22
ESE41 = 2 x ESE21
ESE42 = 2 x ESE22

CCA601 = 2 X CCA301
CCA602 = 2 X CCA302
CCA801 = 2 X CCA301
CCA802 = 2 X CCA302

** When the filter is ordered with FKM seals, the first digit of the indicator code is a letter
(please see Clogging Indicator Chapter for further details)

FPE-AMF-AMD

PRESSURE FILTERS

INSTALLATION DRAWING

FPE 1+ & FPE 2+

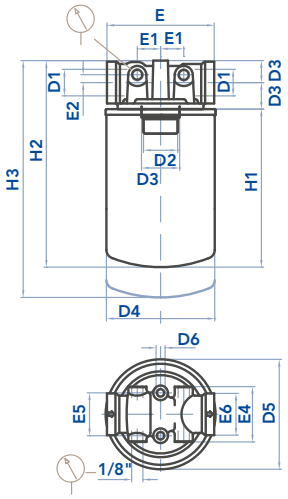

FPE 3+

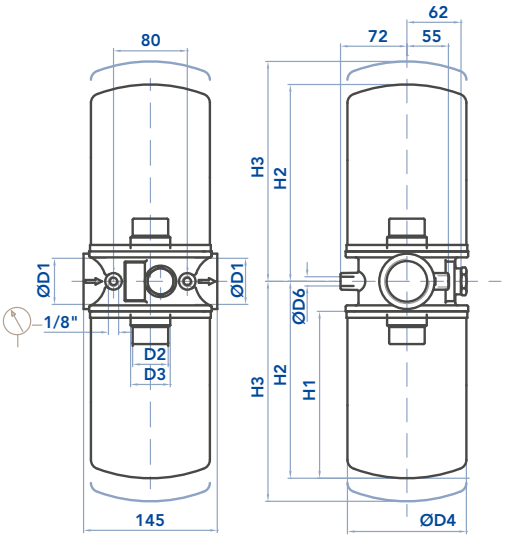

FPE 4+

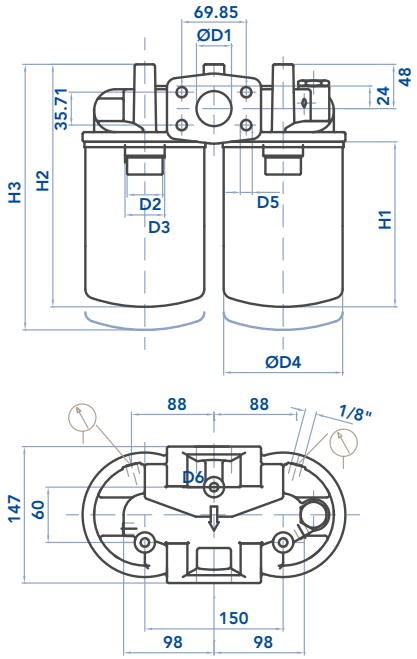

FPE A+ & FPE B+

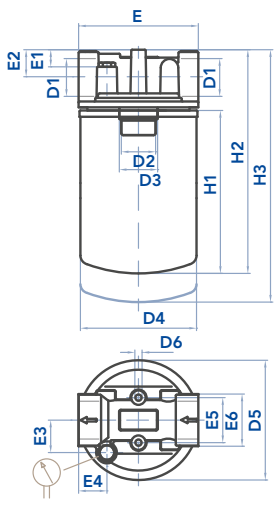

FPE 3+

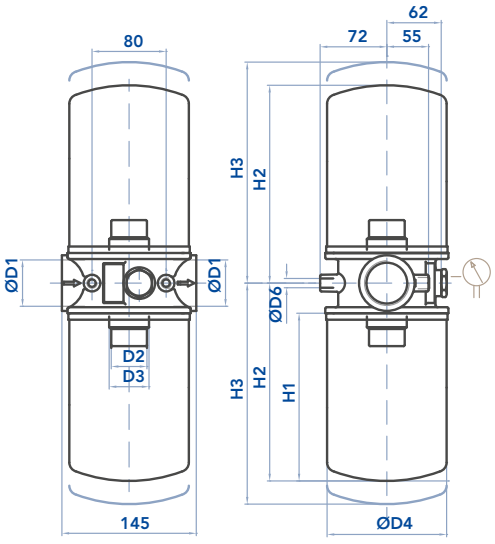

FPE 4+

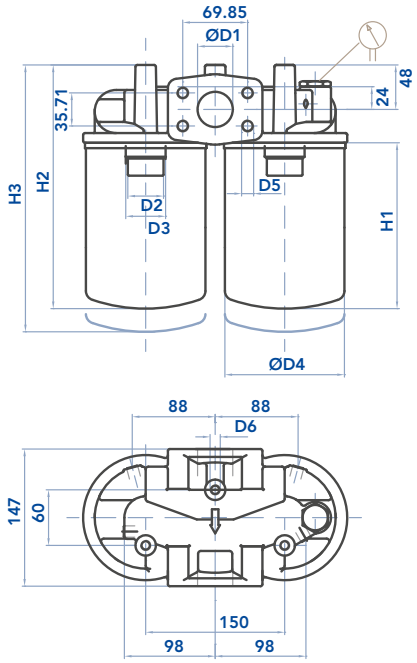



FILTER HOUSING

	D1	D2	D3	D4	D5	D6	E	E1	E2	E3	E4	E5	E6	H1	H2	H3	Kg
FPE11 AMF151	3/4"	3/4" BSP	-	96	96	M8	95	20,5	7	20	48	38	37	145	188	208	1,2
FPE12 AMF152	3/4"	3/4" BSP	-	96	96	M8	95	20,5	7	20	48	38	37	191	234	254	1,5
FPE21 AMF301	1"1/4	1"1/2 16 UN	1"1/4 BSP	129	134	M8	133	35	10	30	64	50	57	181	248	278	1,9
FPE31 AMF601	1"1/2	1"1/2 16 UN	1"1/4 BSP	129	-	M10	-	-	-	-	-	-	-	181	216	246	3,6
FPE41 AMF601	1"1/2	1"1/2 16 UN	1"1/4 BSP	129	M12	M10	-	-	-	-	-	-	-	181	269	299	4,8
FPE22 AMF302	1"1/4	1"1/2 16 UN	1"1/4 BSP	129	134	M8	133	35	10	30	64	50	57	226	293	323	2,0
FPE32 AMF602	1"1/2	1"1/2 16 UN	1"1/4 BSP	129	-	M10	-	-	-	-	-	-	-	226	261	291	3,8
FPE42 AMF602	1"1/2	1"1/2 16 UN	1"1/4 BSP	129	M12	M10	-	-	-	-	-	-	-	226	314	344	5,0

MAINTENANCE

The best time to change your filter element is just before it reaches its maximum dirt-holding capacity. For this reason, we recommend to monitor the pressure of the hydraulic oil flowing through the filter with a clogging indicator. When it is time to change the filter element, switch off the system and make sure there is no pressure in the filter. Remove the dirty filter element. Replace it with an original UFI element, verifying the part number on the filter label or on the catalogue. Lubricate the spin-on gasket, screw on the head until it stops and tighten by turning it 3/4 of a turn

We recommend the stocking of a spare UFI filter element for timely replacement when required.

FPE-AMF-AMD

PRESSURE FILTERS

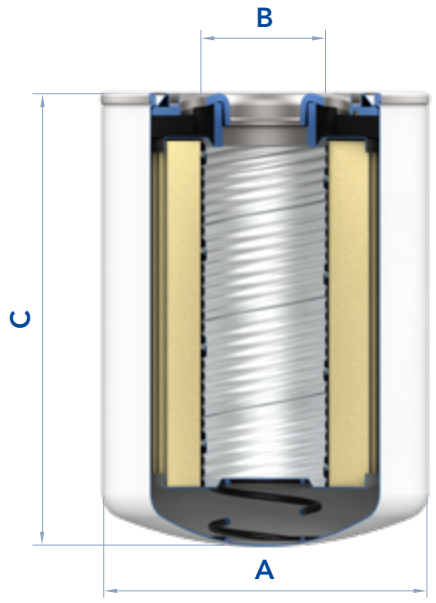

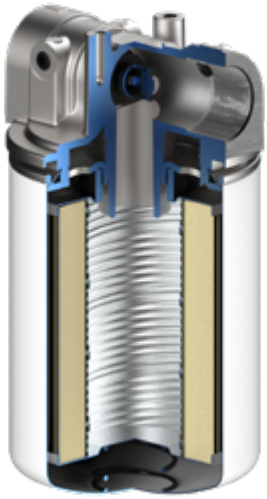

FILTER ELEMENT

	A	B	C	Kg	AREA (cm²) Media F+	AREA (cm²) MediaC+
ESE11 CCA151	96,5	3/4" BSP	146	0,70	2.140	3.305
ESE12 CCA152	96,5	3/4" BSP	191	0,80	3.630	4.745
ESE21 CCA301	129	1"1/4 BSP	181	1,20	4.450	5.560
ESE22 CCA302	129	1"1/4 BSP	226	1,40	5.890	7.360

The used filter elements cannot be cleaned and are classified as "Dangerous waste material". They must be disposed according to local laws by authorized Companies.
Verify that the Company you choose has the expertise and authorization to dispose this type of waste material.

PRESSURE DROP CURVES (ΔP)

The "Assembly Pressure Drop (Δp)" is obtained by adding the pressure drop values of the Filter Housing and
of the Clean Filter Element corresponding to the considered Flow Rate and it must be lower than 50 kPa (0,5 bar) and should never exceed 1/3 of the bypass valve setting.

FILTER HOUSING PRESSURE DROP
(mainly depending on the port size)

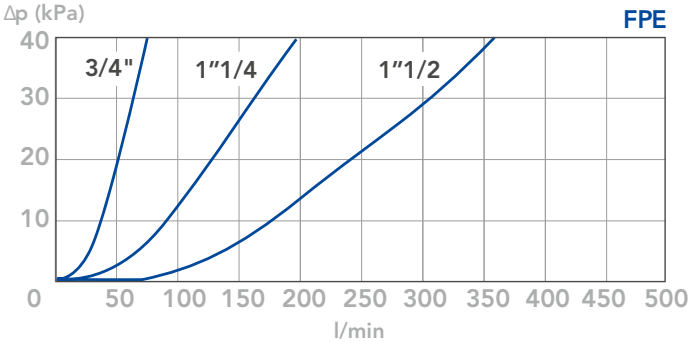



CLEAN FILTER ELEMENT PRESSURE DROP WITH F+ AND C+ MEDIA
(depending both on the internal diameter of the element and on the filter media)

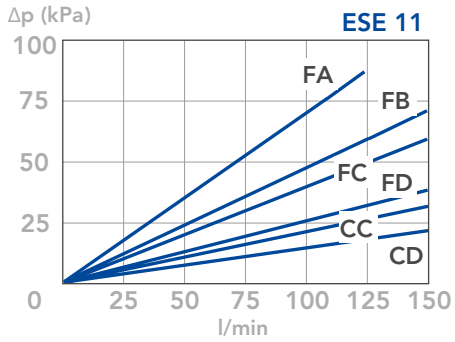

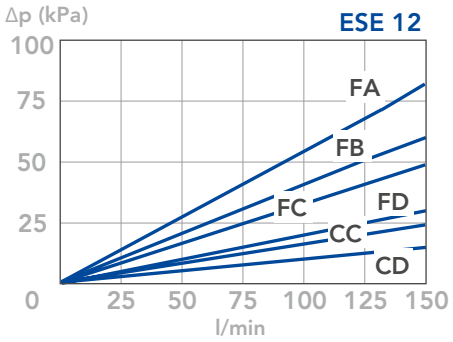

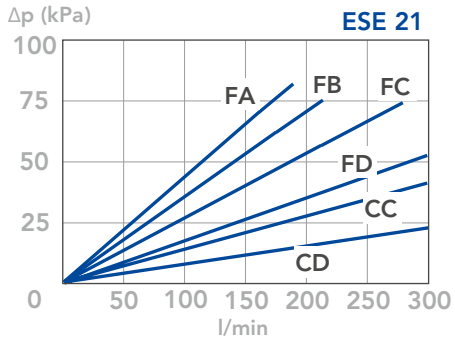

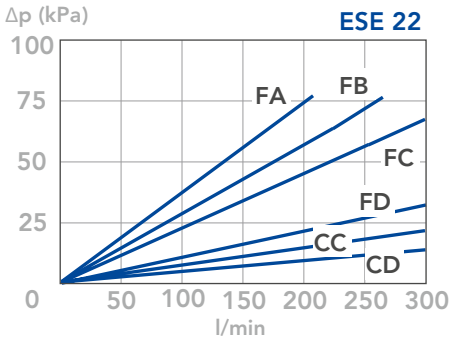

BYPASS VALVE PRESSURE DROP
When selecting the filter size, these curves must be taken into account if it is foreseen that any flow peak is to be absorbed by the bypass valve, it also must be of proper configuration to avoid pressure peaks. The valve pressure drop is directly proportional to fluid specific gravity.

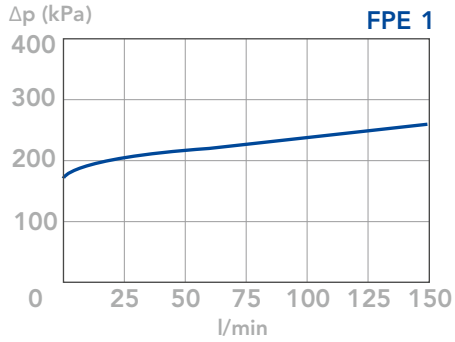

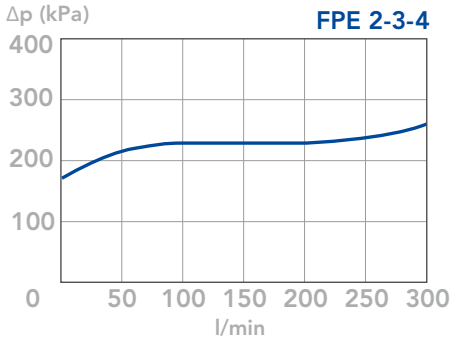

N.B.

All the curves have been obtained with mineral oil having a kinematic viscosity 30 cSt and specific gravity 0,86 Kg/dm3; for fluids with different features, please consider the factors described in the first part of this catalogue. All the curves are obtained from test done at the UFI HYDRAULIC DIVISION Laboratory, according to the specification ISO 3968. In case of discrepancy, please check the contamination level, viscosity and features of the fluid in use.



FPG-MDS
PRESSURE FILTERS



MATERIALS

Head: Aluminium alloy
Bowl: Steel
Bypass valve: Steel
Seals: NBR Nitrile (FKM - on request fluoroelastomer)
Indicator housing: Brass

PRESSURE

Max working: 5 MPa (50 bar)
Collapse, differential for the filter element (ISO 2941):
1 MPa (10 bar)

BYPASS VALVE

Setting: 350 kPa (3,5 bar) ±10%

WORKING TEMPERATURE

From -25° to +110° C

COMPATIBILITY (ISO 2943)

Full with fluids: HH-HL-HM-HV-HTG
(according to ISO 6743/4)
For fluids different than the above mentioned,
please contact our Customer Service.



HYDRAULIC DIAGRAM

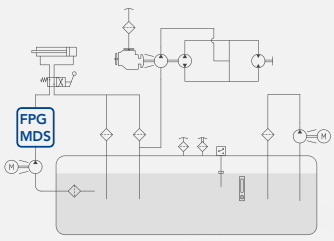

Is this datasheet the latest release? Please check on our website.

FPG
PRESSURE FILTERS

ORDERING AND OPTION CHART

F	P	G	COMPLETE FILTER FAMILY					FILTER ELEMENT FAMILY	E	P	G
			SIZE & LENGHT	20	21	22	31	SIZE & LENGHT			
		B	PORT TYPE								
			B = BSP thread	B	B	B	B				
			PORT SIZE								
			06 = 3/4"	06	06	06	-				
			08 = 1"	08	08	08	-				
			10 = 1" 1/4	-	-	-	10				
			12 = 1" 1/2	-	-	-	12				
			BYPASS VALVE								
			W = without	W	W	W	W				
			D = 350 kPa (3,5 bar)	D	D	D	D				
			SEALS					SEALS			
			N = NBR Nitrile	N	N	N	N				
			F = FKM Fluoroelastomer	F	F	F	F				
			FILTER MEDIA					FILTER MEDIA			
			FA = fibreglass 5 µm(c) β>1.000	FA	FA	FA	FA				
			FB = fibreglass 7 µm(c) β>1.000	FB	FB	FB	FB				
			FC = fibreglass 12 µm(c) β>1.000	FC	FC	FC	FC				
			FS = fibreglass 16 µm(c) β>1.000	FS	FS	FS	FS				
			FD = fibreglass 21 µm(c) β>1.000	FD	FD	FD	FD				
			FE = fibreglass 30 µm(c) β>1.000	FE	FE	FE	FE				
			CC = impregnated cellulose 10 µm β>2	CC	CC	CC	CC				
			CD = impregnated cellulose 25 µm β>2	CD	CD	CD	CD				
			MC = metal wire mesh 10 µm	MC	MC	MC	MC				
			MD = metal wire mesh 30 µm	MD	MD	MD	MD				
			ME = metal wire mesh 60 µm	ME	ME	ME	ME				
			MF = metal wire mesh 90 µm	MF	MF	MF	MF				
			CLOGGING INDICATOR**								
			00 = no indicator port	00	00	00	00				
			03 = port, plugged	03	03	03	03				
			5D = visual differential 250 kPa (2,5 bar)	5D	5D	5D	5D				
			6D = electrical differential 250 kPa (2,5 bar)	6D	6D	6D	6D				
			7D = indicator 6D with LED	7D	7D	7D	7D				
			T6 = elect. diff. 250 kPa (2,5 bar) with thermostat 30°C	T6	T6	T6	T6				
			ACCESSORIES								
			W = No indicator port	W	W	W	W				
			A = Indicator port side A (see dwg)	A	A	A	A				
			B = Indicator port side B (see dwg)	B	B	B	B				
			C = Indicator port side C (see dwg)	C	C	C	C				
		X	ACCESSORIES								
			X = no accessory available	X	X	X	X				

SPARE PARTS ELEMENTS

FILTER HOUSING	FILTER ELEMENT	CLOGGING INDICATOR
		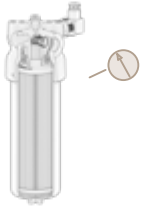
B P G	E P G	



MDS
PRESSURE FILTERS

ORDERING AND OPTION CHART

M	D	S	COMPLETE FILTER FAMILY					FILTER ELEMENT FAMILY	C	D	S
			SIZE & LENGHT	205	210	220	310	SIZE & LENGHT			
			FILTER MEDIA					FILTER MEDIA			
			FT = fibreglass 5 µm(c) β>1.000	FT	FT	FT	FT				
			FC = fibreglass 7 µm(c) β>1.000	FC	FC	FC	FC				
			FD = fibreglass 12 µm(c) β>1.000	FD	FD	FD	FD				
			FS = fibreglass 16 µm(c) β>1.000	FS	FS	FS	FS				
			FV = fibreglass 21 µm(c) β>1.000	FV	FV	FV	FV				
			CD = impregnated cellulose 10 µm β>2	CD	CD	CD	CD				
			CV = impregnated cellulose 25 µm β>2	CV	CV	CV	CV				
			MV =metal wire mesh 30 µm	MV	MV	MV	MV				
			MS = metal wire mesh 60 µm	MS	MS	MS	MS				
			MN =metal wire mesh 90 µm	MN	MN	MN	MN				
			SEALS					SEALS			
			1 = NBR Nitrile	1	1	1	1				
			2 = FKM Fluoroelastomer	2	2	2	2				
			BYPASS VALVE								
			S = without	S	S	S	S				
			D = 350 kPa (3,5 bar)	D	D	D	D				
			PORT TYPE								
			B = BSP thread	B	B	B	B				
			PORT SIZE								
			4 = 3/4"	4	4	4	-				
			5 = 1"	5	5	5	-				
			6 = 1" 1/4	-	-	-	6				
			7 = 1" 1/2	-	-	-	7				
			CLOGGING INDICATOR**								
			00 = no indicator port	00	00	00	00				
			03 = port, plugged	03	03	03	03				
			5D = visual differential 250 kPa (2,5 bar)	5D	5D	5D	5D				
			6D = electrical differential 250 kPa (2,5 bar)	6D	6D	6D	6D				
			7D = indicator 6D with LED	7D	7D	7D	7D				
			T6 = elect. diff. 250 kPa (2,5 bar) with thermostat 30°C	T6	T6	T6	T6				
			ACCESSORIES								
			S = No indicator port	S	S	S	S				
			A = Indicator port side A (see dwg)	A	A	A	A				
			B = Indicator port side A (see dwg)	B	B	B	B				
			C = Indicator port side A (see dwg)	C	C	C	C				
		X	ACCESSORIES								
			X = no accessory available	X	X	X	X				

SPARE SEAL KIT

	NBR	FKM
FPG20 MDS205	521.0117.2	521.0118.2
FPG21 MDS210	521.0117.2	521.0118.2
FPG22 MDS220	521.0117.2	521.0118.2
FPG31 MDS310	521.0119.2	521.0120.2

NOTES

** When the filter is ordered with FKM seals, the first digit of the indicator code is a letter
(please see Clogging Indicator Chapter for further details)

FPG-MDS
PRESSURE FILTERS

INSTALLATION DRAWING

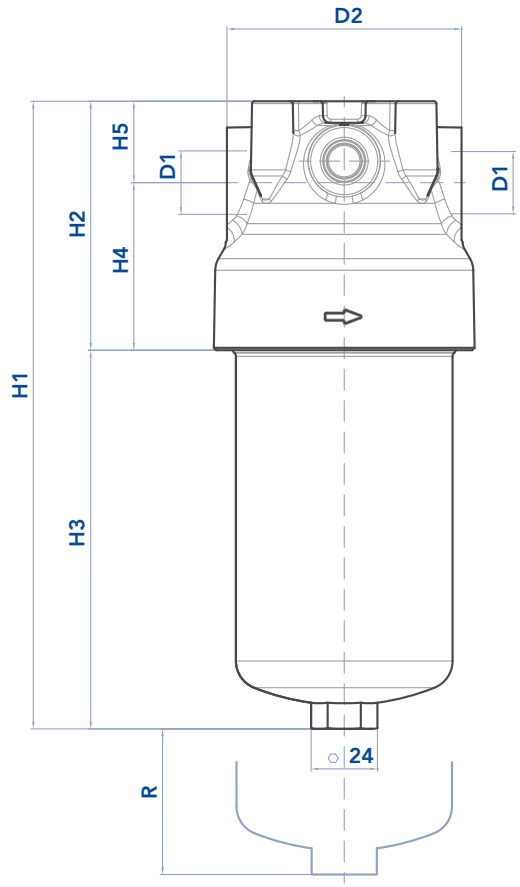

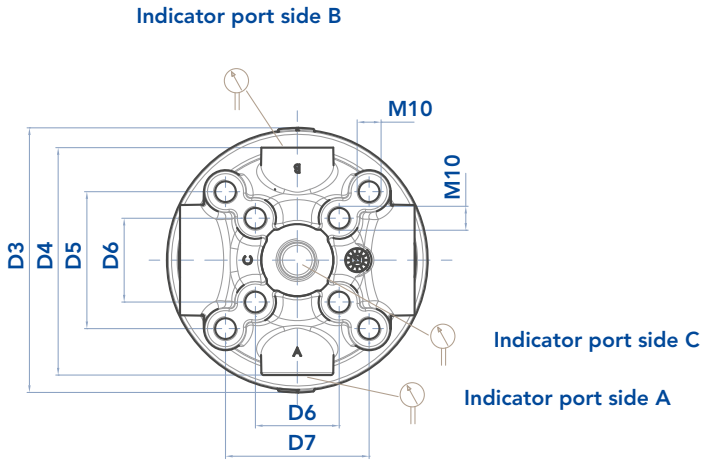

FILTER HOUSING

	D1	D2	D3	D4	D5	D6	D7	H1	H2	H3	R	Kg
FPG20 MDS205	3/4" - 1"	98	110,5	95	57	35	60	202	104	98	70	2,00
FPG21 MDS210	3/4" - 1"	98	110,5	95	57	35	60	262	104	158	70	2,25
FPG22 MDS220	3/4" - 1"	98	110,5	95	57	35	60	342	104	238	70	2,80
FPG31 MDS31	1/4" - 1/2"	122	126	114	70	48	70	341	121	220	70	3,50



MAINTENANCE

The best time to change your filter element is just before it reaches its maximum dirt-holding capacity. For this reason, we recommend to monitor the pressure of the hydraulic oil flowing through the filter with a clogging indicator. When it is time to change the filter element, switch off the system before opening the filter housing and make sure there is no pressure in the filter. Unscrew the bowl and remove the dirty filter element. Replace it with an original UFI element, verifying the part number on the filter label or on the catalogue. Clean the bowl; check the gaskets conditions and replace if necessary. Insert the clean element into his seat, handling with care and cleanliness. Screw the housing until it stops, with a tightening torque of 50 Nm +5/0.
We recommend the stocking of a spare UFI filter element for timely replacement when required.

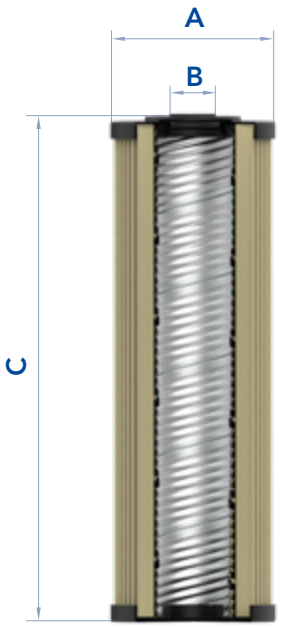





FILTER ELEMENT

					AREA (cm²)	
	A	B	C	Kg	Media F+	Media M+
EPG20 CDS205	78	30	100	0,20	1.300	1.000
EPG21 CDS210	78	30	160	0,30	2.200	1.700
EPG22 CDS220	78	30	240	0,45	3.300	2.600
EPG31 CDS310	92	40	215	0,45	4.700	3.500

The used filter elements cannot be cleaned and are classified as “Dangerous waste material”. They must be disposed according to local laws by authorized Companies.
Verify that the Company you choose has the expertise and authorization to dispose this type of waste material.

FPG-MDS
PRESSURE FILTERS

PRESSURE DROP CURVES (ΔP)

The "Assembly Pressure Drop (Δp)" is obtained by adding the pressure drop values of the Filter Housing and of the Clean Filter Element corresponding to the considered Flow Rate and it must be lower than 120 kPa (1,2 bar) and should never exceed 1/3 of the bypass valve setting.

FILTER HOUSING PRESSURE DROP
(mainly depending on the port size)

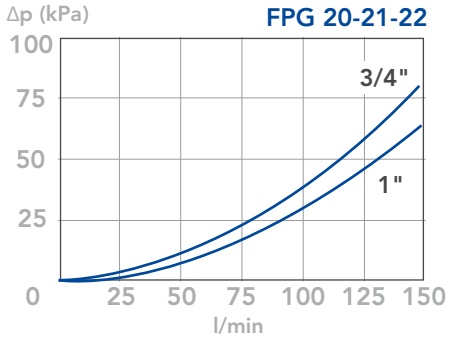

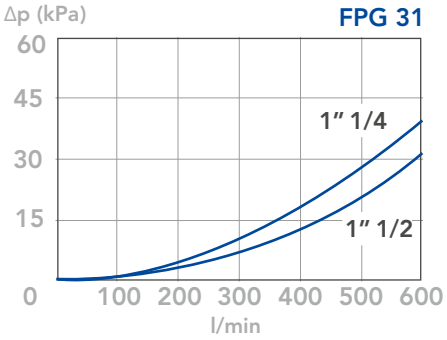

CLEAN FILTER ELEMENT PRESSURE DROP WITH F+ AND C+MEDIA
(depending both on the internal diameter of the element and on the filter media)

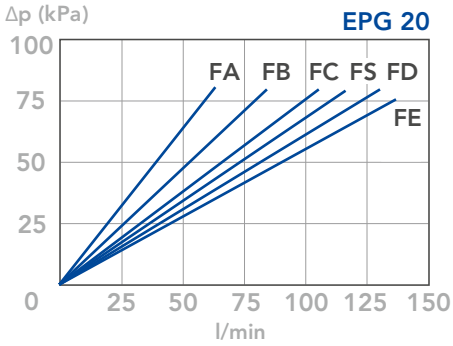

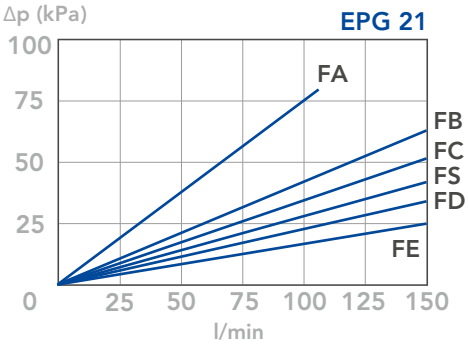

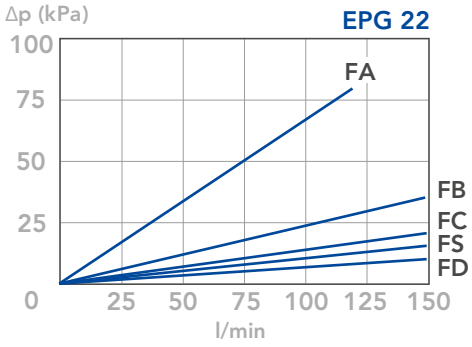

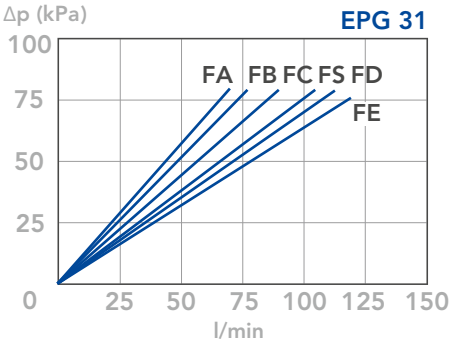

BYPASS VALVE PRESSURE DROP
When selecting the filter size, these curves must be taken into account if it is foreseen that any flow peak is to be absorbed by the bypass valve, it also must be of proper configuration to avoid pressure peaks. The valve pressure drop is directly proportional to fluid specific gravity.

N.B.

All the curves have been obtained with mineral oil having a kinematic viscosity 30 cSt and specific gravity 0,86 kg/dm3; for fluids with different features, please consider the factors described in the first part of this catalogue. All the curves are obtained from test done at the UFI HYDRAULIC DIVISION Laboratory, according to the specification ISO 3968. In case of discrepancy, please check the contamination level, viscosity and features of the fluid in use.

FPH-TLM
PRESSURE FILTERS

MATERIALS

Head: Aluminium alloy
Bowl: Steel
Bypass valve: Polyammide
Seals: NBR Nitrile
Indicator housing: Brass

PRESSURE

Max working: 2 MPa (20 bar)
Collapse, differential for the filter element (ISO 2941):
300 kPa (3 bar)

BYPASS VALVE

Setting: 170 kPa (1,7 bar) ± 10%

WORKING TEMPERATURE

From -25° to +110° C

COMPATIBILITY (ISO 2943)

Full with fluids: HH-HL-HM-HV-HTG
(according to ISO 6743/4)
For fluids different than the above mentioned,
please contact our Customer Service.



HYDRAULIC DIAGRAM

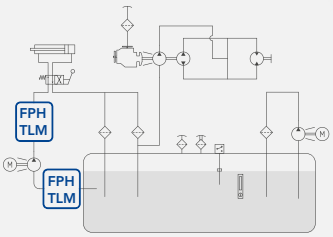

Is this datasheet the latest release? Please check on our website.

FPH
PRESSURE FILTERS

ORDERING AND OPTION CHART

F	P	H	COMPLETE FILTER FAMILY					FILTER ELEMENT FAMILY	E	R	A
			SIZE & LENGHT	31	40	50	52	SIZE & LENGHT			
			PORT TYPE								
			B = BSP thread	B	B	B	B				
			N = NPT thread	N	N	N	N				
			M = metric thread (only M03)	M	-	-	-				
			PORT SIZE								
			03 = 3/8"	03	-	-	-				
			04 = 1/2"	04	-	-	-				
			06 = 3/4"	-	06	-	-				
			08 = 1"	-	08	-	-				
			10 = 1" 1/4	-	-	10					
			12 = 1" 1/2	-	-	-	12				
			18 = M18x1,5	18	-	-	-				
		B	BYPASS VALVE								
			B =170 kPa (1,7 bar)	B	B	B	B				
			SEALS					SEALS			
			N = NBR Nitrile	N	N	N	N				
			F = FKM Fluoroelastomer	F	F	F	F				
			FILTER MEDIA					FILTER MEDIA			
			FA = fibreglass 5 µm(c) β>1.000	FA	FA	FA	FA				
			FB = fibreglass 7 µm(c) β>1.000	FB	FB	FB	FB				
			FC = fibreglass 12 µm(c) β>1.000	FC	FC	FC	FC				
			FS = fibreglass 16 µm(c) β>1.000	FS	FS	FS	FS				
			FD = fibreglass 21 µm(c) β>1.000	FD	FD	FD	FD				
			FE = fibreglass 30 µm(c) β>1.000	FE	FE	FE	FE				
			ME = metal wire mesh 60 µm	ME	ME	ME	ME				
			MF = metal wire mesh 90 µm	MF	MF	MF	MF				
			CLOGGING INDICATOR**								
			03 = port, plugged	03	03	03	03				
			5B = visual differential 130 kPa (1,3 bar)	5B	5B	5B	5B				
			6B = electrical differential 130 kPa (1,3 bar)	6B	6B	6B	6B				
			7B = indicator 6B with LED	7B	7B	7B	7B				
			T0 = elect. diff. 130 kPa (1,3 bar) with thermostat 30°C	T0	T0	T0	T0				
			0R = 1/8" predisposition	0R	0R	0R	0R				
			31 = pressure gauge, rear connection	31	31	31	31				
			P1 =SPDT, pressure switch	P1	P1	P1	P1				
			10 = vacuum gauge	10	10	10	10				
			91 = vacuum switch	91	91	91	91				
X	X		ACCESSORIES								
			XX = no accessory available	XX	XX	XX	XX				



TLM
PRESSURE FILTERS

ORDERING AND OPTION CHART

T	L	M	COMPLETE FILTER FAMILY					FILTER ELEMENT FAMILY	C	R	E
			SIZE & LENGHT	019	055	115	150	SIZE & LENGHT			
				015	048	058	100				
			FILTER MEDIA					FILTER MEDIA			
			FT = fibreglass 5 µm(c) β>1.000	FT	FT	FT	FT				
			FC = fibreglass 7 µm(c) β>1.000	FC	FC	FC	FC				
			FD = fibreglass 12 µm(c) β>1.000	FD	FD	FD	FD				
			FS = fibreglass 16 µm(c) β>1.000	FS	FS	FS	FS				
			FV = fibreglass 21 µm(c) β>1.000	FV	FV	FV	FV				
			MS = metal wire mesh 60 µm	MS	MS	MS	MS				
			MN =metal wire mesh 90 µm	MN	MN	MN	MN				
			SEALS					SEALS			
			1 = NBR Nitrile	1	1	1	1				
			2 = FKM Fluoroelastomer	2	2	2	2				
		B	BYPASS VALVE								
			B =170 kPa (1,7 bar)	B	B	B	B				
			PORT TYPE								
			B = BSP thread	B	B	B	B				
			N = NPT thread	N	N	N	N				
			PORT SIZE								
			2 = 3/8"	2	-	-	-				
			3 = 1/2"	3	-	-	-				
			4 = 3/4"	-	4	-	-				
			5 = 1"	-	5	-	-				
			6 = 1" 1/4	-	-	6	-				
			7 = 1" 1/2	-	-	-	7				
			CLOGGING INDICATOR**								
			03 = port, plugged	03	03	03	03				
			5B = visual differential 130 kPa (1,3 bar)	5B	5B	5B	5B				
			6B = electrical differential 130 kPa (1,3 bar)	6B	6B	6B	6B				
			7B = indicator 6B with LED	7B	7B	7B	7B				
			T0 = elect. diff. 130 kPa (1,3 bar) with thermostat 30°C	T0	T0	T0	T0				
			0R = 1/8" predisposition	0R	0R	0R	0R				
			31 = pressure gauge, rear connection	31	31	31	31				
			P1 =SPDT, pressure switch	P1	P1	P1	P1				
			10 = vacuum gauge	10	10	10	10				
			91 = vacuum switch	91	91	91	91				
X	X		ACCESSORIES								
			XX = no accessory available	XX	XX	XX	XX				

NOTE

** When the filter is ordered with FKM seals, the first digit of the indicator code is a letter (please see Clogging Indicator Chapter for further details)

FPH-TLM
PRESSURE FILTERS

SPARE PARTS ELEMENTS

FILTER HOUSING	FILTER ELEMENT	CLOGGING INDICATOR
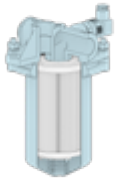	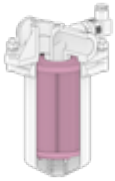	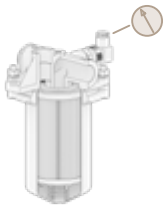
B P H ▢ ▢ ▢ ▢ ▢ B ▢ ■ ■ ▢ ▢ X X	E R A ▢ ▢ ▢ ▢ ▢	▢ ▢

INSTALLATION DRAWING

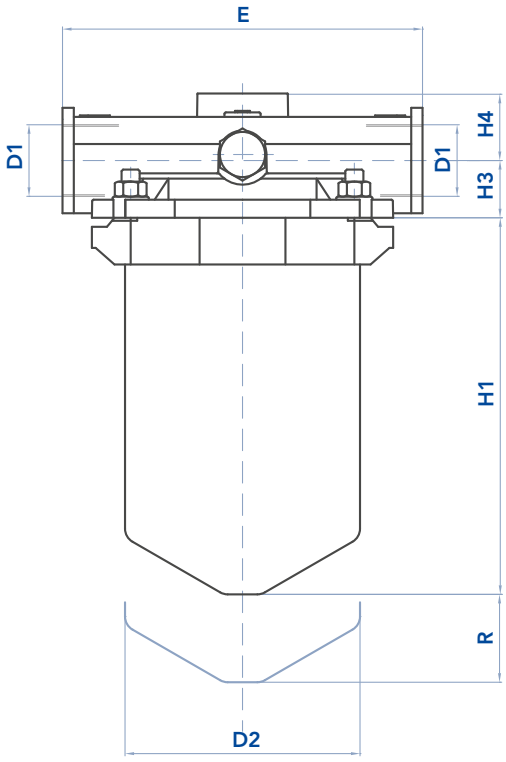

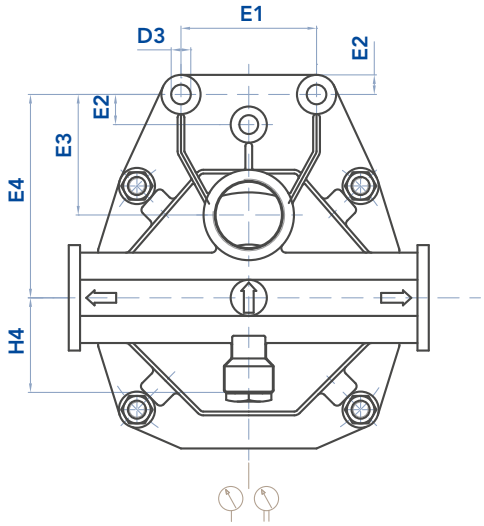

FILTER HOUSING

	D1	D2	D3	E	E1	E2	E3	E4	E5	E6	H1	H2	H3	H4	R	Kg
FPH31 TLM019	3/8"- 1/2" - M18x1,5	81	8,5	114	50	-	42	70	15	10	114	44	19	27	20	1,3
FPH40 TLM055	3/4" - 1"	114	10,5	150	50	-	50	85	12	13	204	58	30	35	20	3,2
FPH50 TLM115	1"1/4	156	13	240	90	20	80	135	56	13	180	62	38	45	25	6,1
FPH52 TLM150	1"1/2	156	13	240	90	20	80	135	56	13	250	62	38	45	25	6,8



MAINTENANCE

The best time to change your filter element is just before it reaches its maximum dirt-holding capacity. For this reason, we recommend to monitor the pressure of the hydraulic oil flowing through the filter with a clogging indicator. When it is time to change the filter element, switch off the system before opening the filter housing and make sure there is no pressure in the filter.
Unscrew the nuts and remove the inferior flange and the bowl. Remove the dirty filter element and hold the spring (do not throw it away). Replace the element with an original UFI, verifying the part number on the filter label or on the catalogue. Insert the clean element into his seat, handling with care and cleanliness. Check the gasket condition and replace if necessary. Place the spring on the bottom of the bowl. Place the bowl in contact with the head gasket. Place the inferior flange and screw the upper nuts until the bowl is completely locked on the head ensuring the seal.

We recommend the stocking of a spare UFI filter element for timely replacement when required.

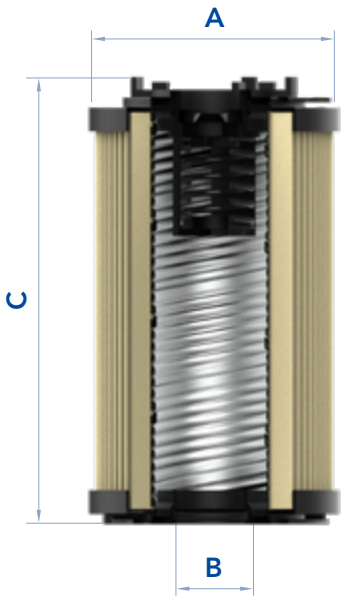

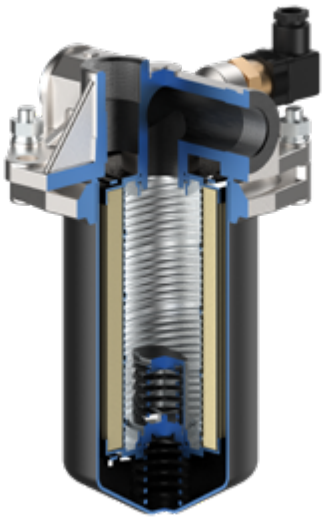

FILTER ELEMENT

					AREA (cm^2)	
	A	B	C	Kg	Media F+	Media M+
ERA31 CRE015	70	28	93	0,20	620	450
ERA40 CRE048	99	40	178	0,60	3.630	1.690
ERA50 CRE058	130	63	148	1,00	4.450	1.830
ERA52 CRE100	130	63	208	1,35	6.190	2.735

The used filter elements cannot be cleaned and are classified as “Dangerous waste material”. They must be disposed according to local laws by authorized Companies.
Verify that the Company you choose has the expertise and authorization to dispose this type of waste material.

FPH-TLM
PRESSURE FILTERS

PRESSURE DROP CURVES (ΔP)

The “Assembly Pressure Drop (Δp)” is obtained by adding the pressure drop values of the Filter Housing and of the Clean Filter Element corresponding to the considered Flow Rate and it must be lower than 50 kPa (0,5 bar).

FILTER HOUSING PRESSURE DROP
(mainly depending on the port size)

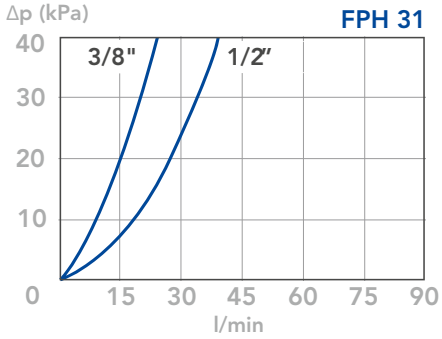

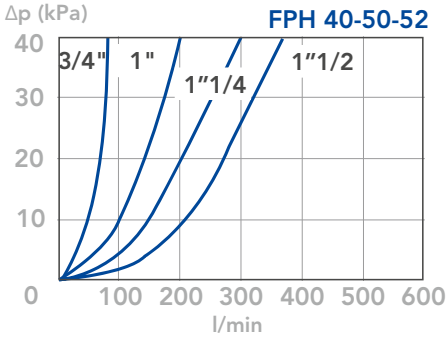

CLEAN FILTER ELEMENT PRESSURE DROP WITH F+ MEDIA
(depending both on the internal diameter of the element and on the filter media)

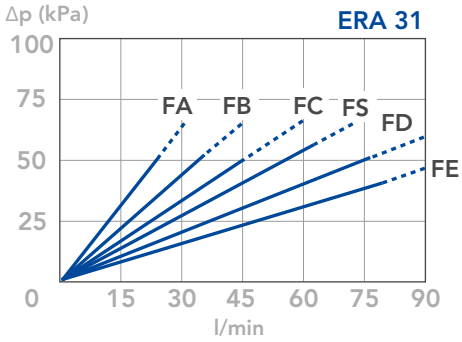

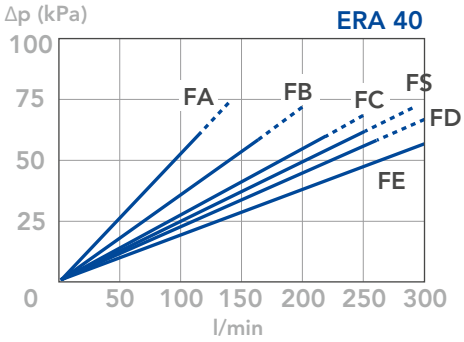

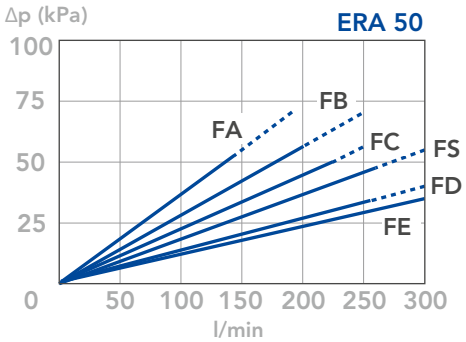

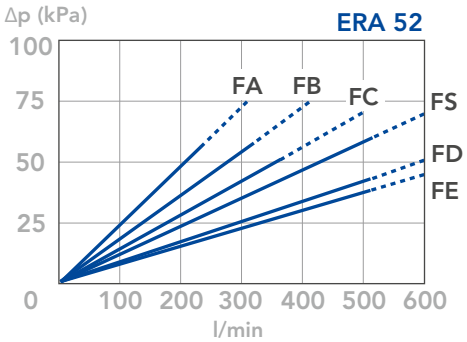

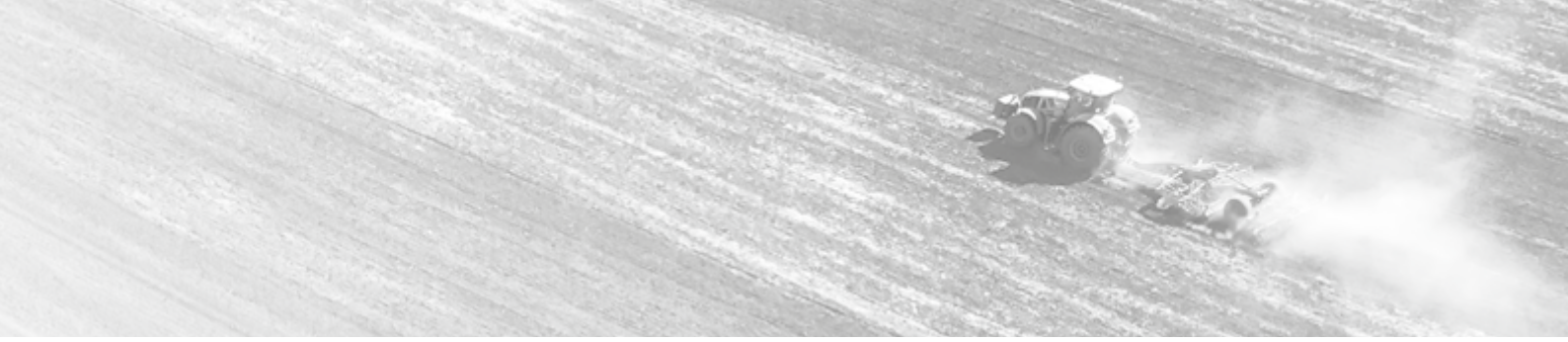

BYPASS VALVE PRESSURE DROP

When selecting the filter size, these curves must be taken into account if it is foreseen that any flow peak is to be absorbed by the bypass valve, it also must be of proper configuration to avoid pressure peaks. The valve pressure drop is directly proportional to fluid specific gravity.

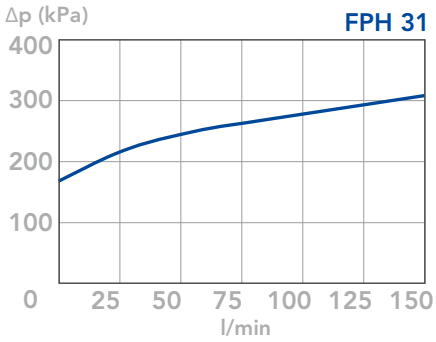

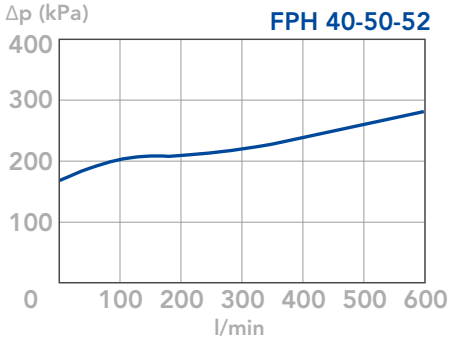

CLEAN FILTER ELEMENT PRESSURE DROP WITH C+ AND M+ MEDIA

(depending both on the internal diameter of the element and on the filter media)

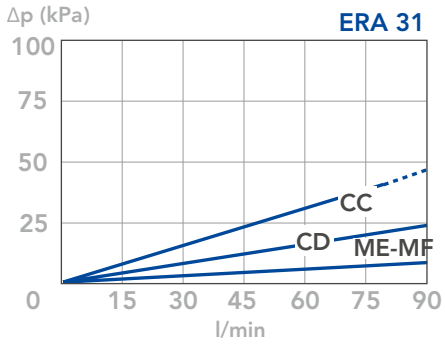

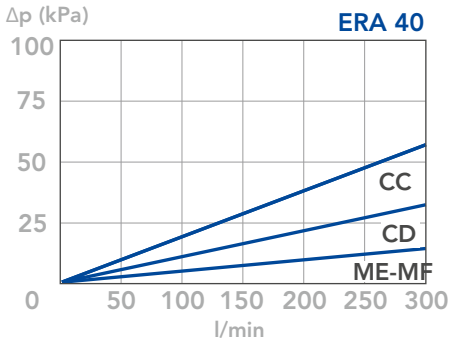

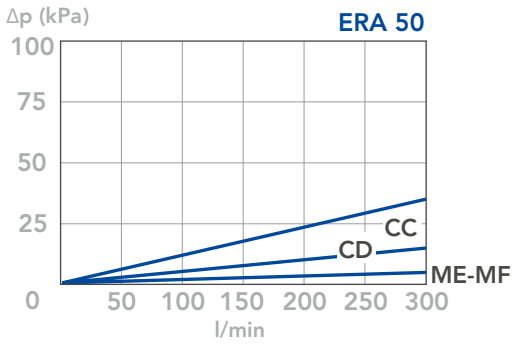

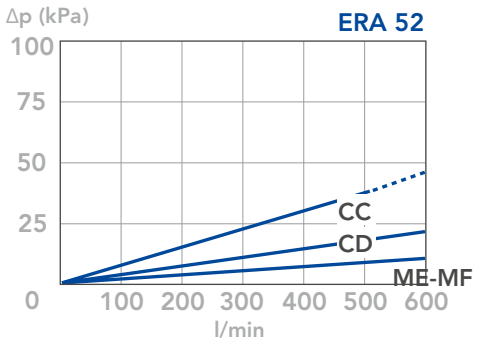

N.B.

All the curves have been obtained with mineral oil having a kinematic viscosity 30 cSt and specific gravity 0,86 Kg/dm3; for fluids with different features, please consider the factors described in the first part of this catalogue. All the curves are obtained from test done at the UFI HYDRAULIC DIVISION Laboratory, according to the specification ISO 3968. In case of discrepancy, please check the contamination level, viscosity and features of the fluid in use.

FPH-TLM
PRESSURE FILTERS

BYPASS VALVE PRESSURE DROP

When selecting the filter size, these curves must be taken into account if it is foreseen that any flow peak is to be absorbed by the bypass valve, it also must be of proper configuration to avoid pressure peaks. The valve pressure drop is directly proportional to fluid specific gravity.

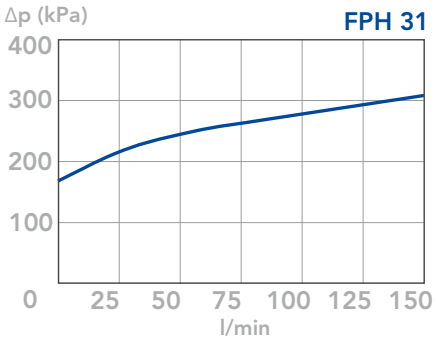

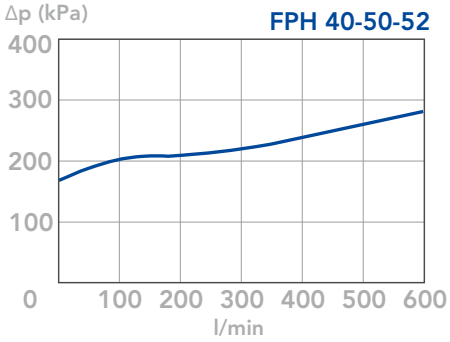

N.B.

All the curves have been obtained with mineral oil having a kinematic viscosity 30 cSt and specific gravity 0,86 Kg/dm3; for fluids with different features, please consider the factors described in the first part of this catalogue. All the curves are obtained from test done at the UFI HYDRAULIC DIVISION Laboratory, according to the specification ISO 3968. In case of discrepancy, please check the contamination level, viscosity and features of the fluid in use.

FPL-SPP
PRESSURE FILTERS



MATERIALS

Head: Cast iron
Bowl: Steel
Bypass valve: Steel
Seals: NBR Nitrile
(FKM - on request fluoroelastomer)
Indicator housing: Brass

PRESSURE

Max working: 31,5 MPa (315 bar)
Collapse, differential for the filter element (ISO 2941)
standard series: 2 MPa (20 bar)
H+ series: 21 MPa (210 bar)

BYPASS VALVE

Setting: 600 kPa (6 bar) ± 10%

WORKING TEMPERATURE

From -25° to +110° C

COMPATIBILITY (ISO 2943)

Full with fluids: HH-HL-HM-HV-HTG
(according to ISO 6743/4)
For fluids different than the above mentioned,
please contact our Customer Service



HYDRAULIC DIAGRAM

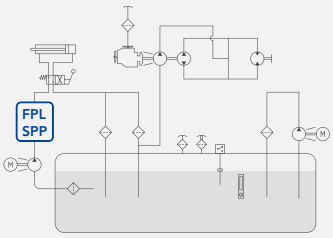

Is this datasheet the latest release? Please check on our website.



FPL
PRESSURE FILTERS

ORDERING AND OPTION CHART

F	P	L	COMPLETE FILTER FAMILY										FILTER ELEMENT FAMILY	E	P	B
			SIZE & LENGHT	11	12	13	21	22	31	32	33	34	35	SIZE & LENGHT			
			PORT TYPE														
			C = Flanges 90° (manifold)	C	C	C	C	C	C	C	C	C	C				
			PORT SIZE														
			15 = size 15	15	15	15	-	-	-	-	-	-	-				
			20 = size 20	-	-	-	20	20	-	-	-	-	-				
			32 = size 32	-	-	-	-	-	32	32	32	32	32				
			BYPASS VALVE														
			W = without	W	W	W	W	W	W	W	W	W	W				
			C = 600 kPa (6 bar)	C	C	C	C	C	C	C	C	C	C				
			SEALS											SEALS			
			N = NBR Nitrile	N	N	N	N	N	N	N	N	N	N				
			F = FKM Fluoroelastomer	F	F	F	F	F	F	F	F	F	F				
			FILTER MEDIA											FILTER MEDIA			
			FA = fibreglass 5 µm(c) β>1.000 Δp 2MPa (20 bar)	FA	FA	FA	FA	FA	FA	FA	FA	FA	FA				
			FB = fibreglass 7 µm(c) β>1.000 Δp 2MPa (20 bar)	FB	FB	FB	FB	FB	FB	FB	FB	FB	FB				
			FC = fibreglass 12 µm(c) β>1.000 Δp 2MPa (20 bar)	FC	FC	FC	FC	FC	FC	FC	FC	FC	FC				
			FS = fibreglass 16 µm(c) β>1.000 Δp 2MPa (20 bar)	FS	FS	FS	FS	FS	FS	FS	FS	FS	FS				
			FD = fibreglass 21 µm(c) β>1.000 Δp 2MPa (20 bar)	FD	FD	FD	FD	FD	FD	FD	FD	FD	FD				
			FE = fibreglass 30 µm(c) β>1.000 Δp 2MPa (20 bar)	FE	FE	FE	FE	FE	FE	FE	FE	FE	FE				
			HA = fibreglass 5 µm(c) β>1.000 Δp 21MPa (210 bar)	HA	HA	HA	HA	HA	HA	HA	HA	HA	HA				
			HB = fibreglass 7 µm(c) β>1.000 Δp 21MPa (210 bar)	HB	HB	HB	HB	HB	HB	HB	HB	HB	HB				
			HC = fibreglass 12 µm(c) β>1.000 Δp 21MPa (210 bar)	HC	HC	HC	HC	HC	HC	HC	HC	HC	HC				
			HD = fibreglass 21 µm(c) β>1.000 Δp 21MPa (210 bar)	HD	HD	HD	HD	HD	HD	HD	HD	HD	HD				
			CLOGGING INDICATOR**														
			03 = port, plugged	03	03	03	03	03	03	03	03	03	03				
			5E = visual differential 500 kPa (5 bar)	5E	5E	5E	5E	5E	5E	5E	5E	5E	5E				
			5F = visual differential 800 kPa (8 bar)	5F	5F	5F	5F	5F	5F	5F	5F	5F	5F				
			6E = electrical differential 500 kPa (5 bar)	6E	6E	6E	6E	6E	6E	6E	6E	6E	6E				
			6F = electrical differential 800 kPa (8 bar)	6F	6F	6F	6F	6F	6F	6F	6F	6F	6F				
			7E = indicator 6E with LED	7E	7E	7E	7E	7E	7E	7E	7E	7E	7E				
			7F = indicator 6F with LED	7F	7F	7F	7F	7F	7F	7F	7F	7F	7F				
			T2 = elect. diff. 500 kPa (5 bar) with thermostat 30°C	T2	T2	T2	T2	T2	T2	T2	T2	T2	T2				
			T3 = elect. diff. 800 kPa (8 bar) with thermostat 30°C	T3	T3	T3	T3	T3	T3	T3	T3	T3	T3				
X	X		ACCESSORIES														
			XX = no accessory available	XX	XX	XX	XX	XX	XX	XX	XX	XX	XX				



SPP
PRESSURE FILTERS

ORDERING AND OPTION CHART

S	P	P	COMPLETE FILTER FAMILY										FILTER ELEMENT FAMILY	C	C	H
			SIZE & LENGHT	151	152	153	301	302	801	802	803	804	805	SIZE & LENGHT			
			FILTER MEDIA											FILTER MEDIA			
			FT = fibreglass 5 µm(c) β>1.000 Δp 2MPa (20 bar)	FT	FT	FT	FT	FT	FT	FT	FT	FT	FT				
			FC = fibreglass 7 µm(c) β>1.000 Δp 2MPa (20 bar)	FC	FC	FC	FC	FC	FC	FC	FC	FC	FC				
			FD = fibreglass 12 µm(c) β>1.000 Δp 2MPa (20 bar)	FD	FD	FD	FD	FD	FD	FD	FD	FD	FD				
			FS = fibreglass 16 µm(c) β>1.000 Δp 2MPa (20 bar)	FS	FS	FS	FS	FS	FS	FS	FS	FS	FS				
			FV = fibreglass 21 µm(c) β>1.000 Δp 2MPa (20 bar)	FV	FV	FV	FV	FV	FV	FV	FV	FV	FV				
			2T = fibreglass 5 µm(c) β>1.000 Δp 21MPa (210 bar)	2T	2T	2T	2T	2T	2T	2T	2T	2T	2T				
			2C = fibreglass 7 µm(c) β>1.000 Δp 21MPa (210 bar)	2C	2C	2C	2C	2C	2C	2C	2C	2C	2C				
			2D = fibreglass 12 µm(c) β>1.000 Δp 21MPa (210 bar)	2D	2D	2D	2D	2D	2D	2D	2D	2D	2D				
			2V = fibreglass 21 µm(c) β>1.000 Δp 21MPa (210 bar)	2V	2V	2V	2V	2V	2V	2V	2V	2V	2V				
			SEALS											SEALS			
			1 = NBR Nitrile	1	1	1	1	1	1	1	1	1	1				
			2 = FKM Fluoroelastomer	2	2	2	2	2	2	2	2	2	2				
			BYPASS VALVE														
			S = without	S	S	S	S	S	S	S	S	S	S				
			C = 600 kPa (6 bar)	C	C	C	C	C	C	C	C	C	C				
			PORT TYPE														
			P = Manifold type mounting	P	P	P	P	P	P	P	P	P	P				
			PORT SIZE														
			A = size 15	A	A	A	-	-	-	-	-	-	-				
			B = size 20	-	-	-	B	B	-	-	-	-	-				
			C = size 32	-	-	-	-	-	C	C	C	C	C				
			CLOGGING INDICATOR**														
			03 = port, plugged	03	03	03	03	03	03	03	03	03	03				
			5E = visual differential 500 kPa (5 bar)	5E	5E	5E	5E	5E	5E	5E	5E	5E	5E				
			5F = visual differential 800 kPa (8 bar)	5F	5F	5F	5F	5F	5F	5F	5F	5F	5F				
			6E = electrical differential 500 kPa (5 bar)	6E	6E	6E	6E	6E	6E	6E	6E	6E	6E				
			6F = electrical differential 800 kPa (8 bar)	6F	6F	6F	6F	6F	6F	6F	6F	6F	6F				
			7E = indicator 6E with LED	7E	7E	7E	7E	7E	7E	7E	7E	7E	7E				
			7F = indicator 6F with LED	7F	7F	7F	7F	7F	7F	7F	7F	7F	7F				
			T2 = elect. diff. 500 kPa (5 bar) with thermostat 30°C	T2	T2	T2	T2	T2	T2	T2	T2	T2	T2				
			T3 = elect. diff. 800 kPa (8 bar) with thermostat 30°C	T3	T3	T3	T3	T3	T3	T3	T3	T3	T3				
X	X		ACCESSORIES														
			XX = no accessory available	XX	XX	XX	XX	XX	XX	XX	XX	XX	XX				

NOTE

** When the filter is ordered with FKM seals, the first digit of the indicator code is a letter (please see Clogging Indicator Chapter for further details)

FPL-SPP
PRESSURE FILTERS

SPARE PARTS ELEMENTS

FILTER HOUSING	FILTER ELEMENT	CLOGGING INDICATOR
	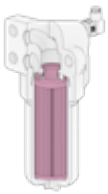	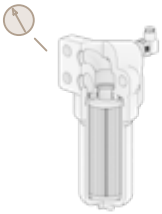
B P L C X X	E P B	

SPARE SEAL KIT

	NBR	FKM
FPL11 SPP151	521.0080.2	521.0083.2
FPL12 SPP152	521.0080.2	521.0083.2
FPL13 SPP153	521.0080.2	521.0083.2
FPL21 SPP301	521.0081.2	521.0084.2
FPL22 SPP302	521.0081.2	521.0084.2

	NBR	FKM
FPL31 SPP801	521.0082.2	521.0085.2
FPL32 SPP802	521.0082.2	521.0085.2
FPL33 SPP803	521.0082.2	521.0085.2
FPL34 SPP804	521.0082.2	521.0085.2
FPL35	521.0082.2	521.0085.2

INSTALLATION DRAWING

FPL1

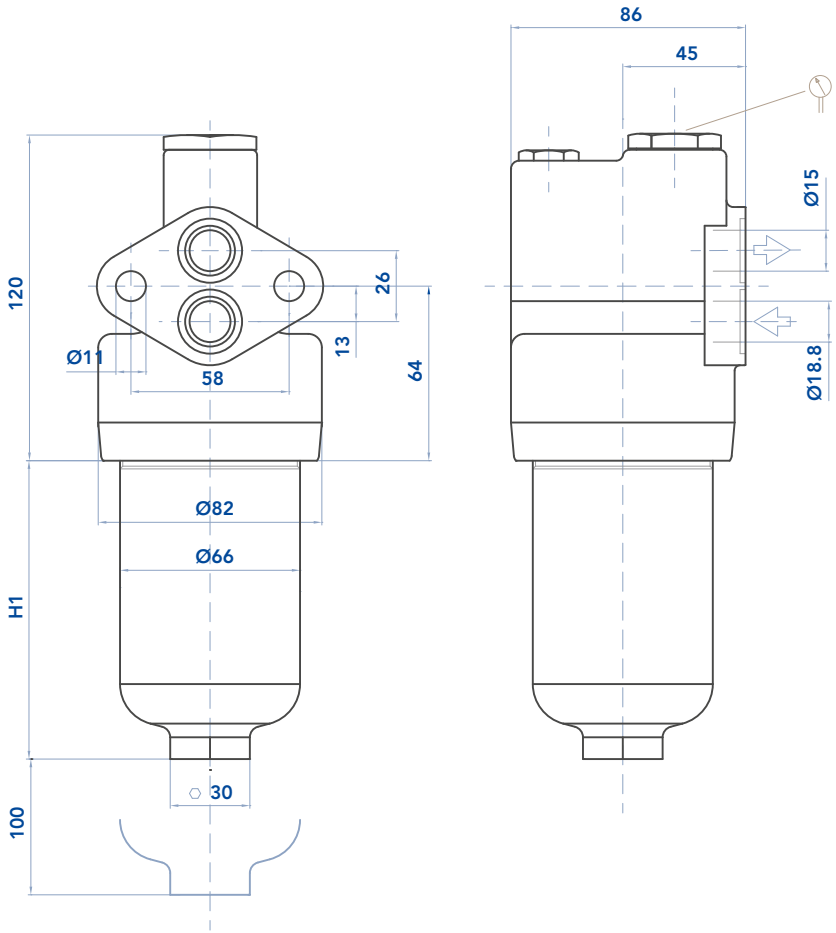



INSTALLATION DRAWING

FPL2

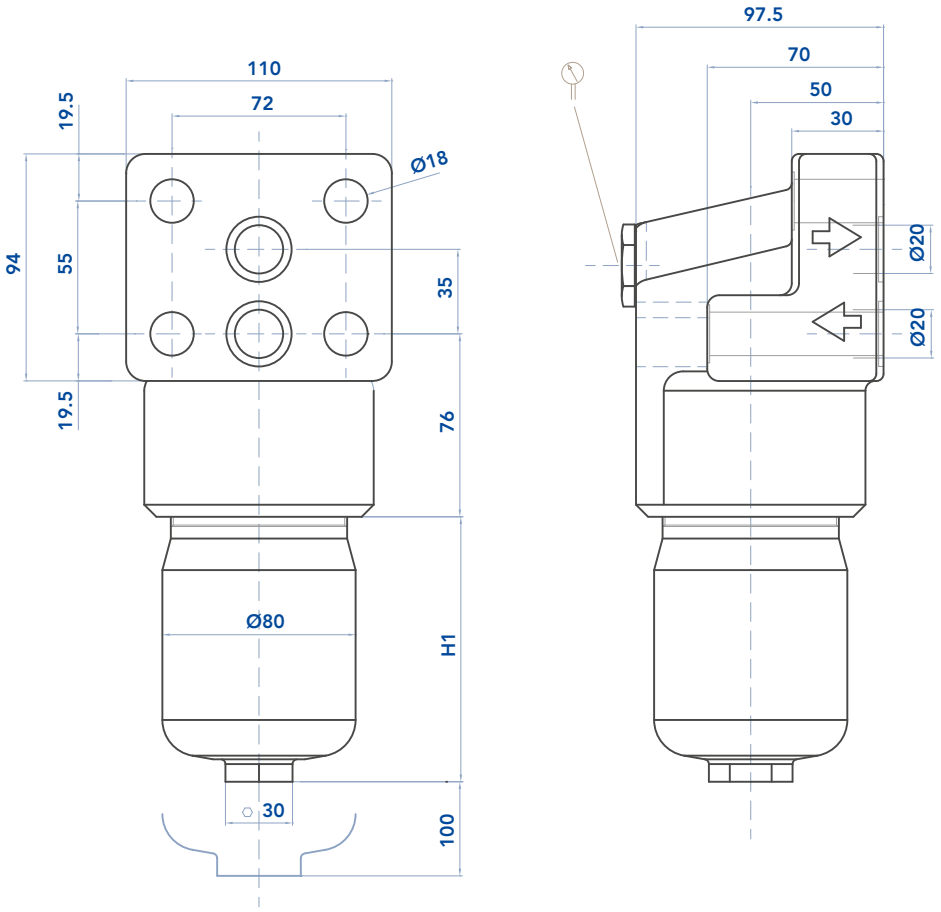

FILTER HOUSING

	H1	Kg
FPL11 SPP151	79	4,4
FPL12 SPP152	109	4,6
FPL13 SPP153	209	5,2
FPL21 SPP301	116	6,6
FPL22 SPP302	207	8,2

FPL-SPP
PRESSURE FILTERS



INSTALLATION DRAWING

FPL 31-32-33

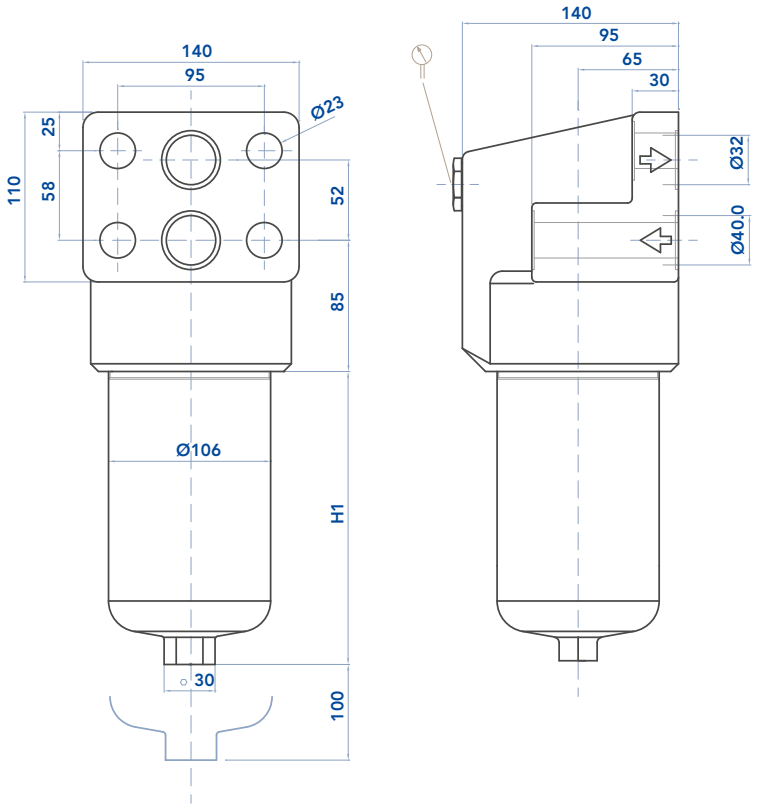

FPL 34-35

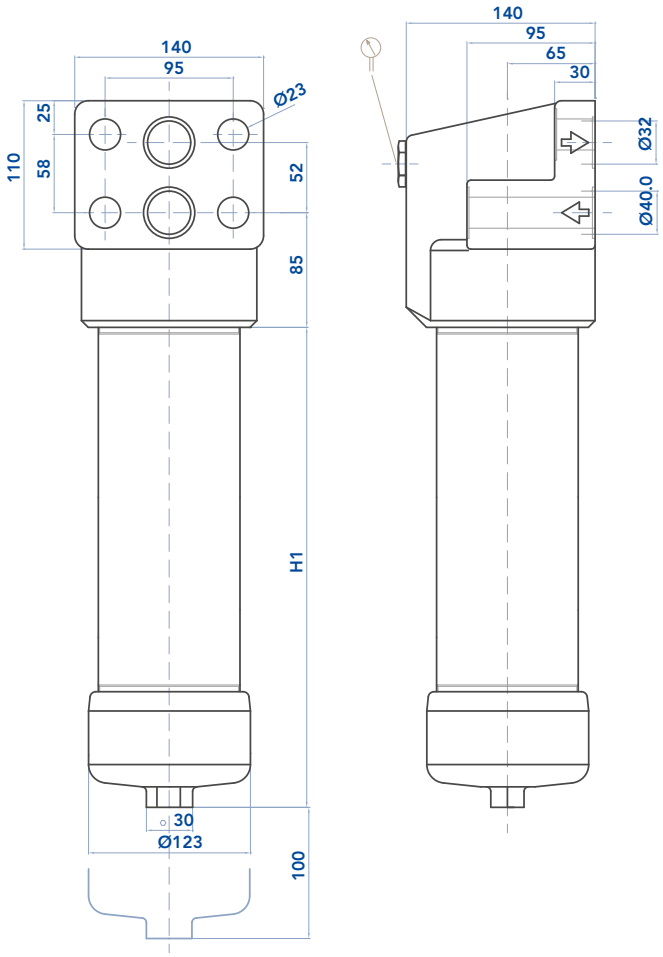

FILTER HOUSING

	H1	Kg
FPL31 SPP801	107	11,0
FPL32 SPP802	199	13,9
FPL33 SPP803	319	17,2
FPL34 SPP804	420	22,0
FPL35	520	25,0



MAINTENANCE

The best time to change your filter element is just before it reaches its maximum dirt-holding capacity. For this reason, we recommend to monitor the pressure of the hydraulic oil flowing through the filter with a clogging indicator. When it is time to change the filter element, switch off the system before opening the filter housing and make sure there is no pressure in the filter. Unscrew the bowl and remove the dirty filter element. Replace it with an original UFI element, verifying the part number on the filter label or on the catalogue. Clean the bowl; check the gaskets conditions and replace if necessary. Insert the clean element into his seat, handling with care and cleanliness. Screw the housing until it stops, with a tightening torque of 70 Nm +5/0.
We recommend the stocking of a spare UFI filter element for timely replacement when required.

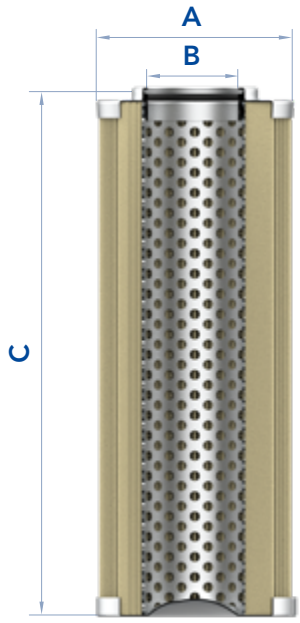



FILTER ELEMENT

	A	B	C	Kg Media F	Kg MediaH	AREA (cm²) Media F+	AREA (cm²) MediaH+
EPB11 CCH151	45	25	85	0,15	0,25	355	340
EPB12 CCH152	45	25	116	0,20	0,55	500	475
EPB13 CCH153	45	25	211	0,30	0,45	935	915
EPB21 CCH301	52	23,5	115	0,25	0,40	975	975
EPB22 CCH302	52	23,5	210	0,35	0,55	1.830	1.785
EPB31 CCH801	78	42,5	118	0,40	0,70	2.000	1.470
EPB32 CCH802	78	42,5	210	0,80	1,30	3.695	2.695
EPB33 CCH803	78	42,5	330	1,00	1,60	5.025	4.325
EPB34 CCH804	78	42,5	430	1,20	1,80	6.585	5.685
EPB35	78	42,5	530	1,40	2,00	8.145	7.045

The used filter elements cannot be cleaned and are classified as “Dangerous waste material”. They must be disposed according to local laws by authorized Companies.
Verify that the Company you choose has the expertise and authorization to dispose this type of waste material.

FPL-SPP
PRESSURE FILTERS



PRESSURE DROP CURVES (ΔP)

The “Assembly Pressure Drop (Δp)” is obtained by adding the pressure drop values of the Filter Housing and
of the Clean Filter Element corresponding to the considered Flow Rate and it must be lower than 120 kPa (1,2 bar) and should never exceed 1/3 of the bypass setting.

FILTER HOUSING PRESSURE DROP
(mainly depending on the port size)

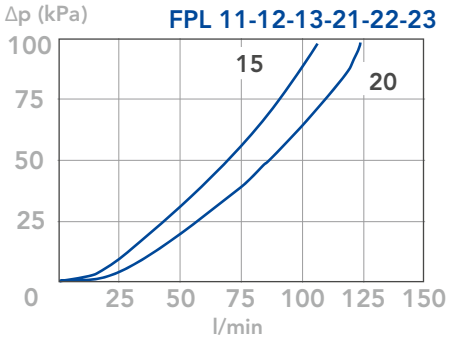

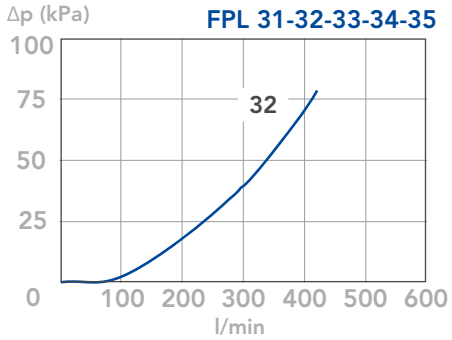

CLEAN FILTER ELEMENT PRESSURE DROP WITH F+ MEDIA
(depending both on the internal diameter of the element and on the filter media)

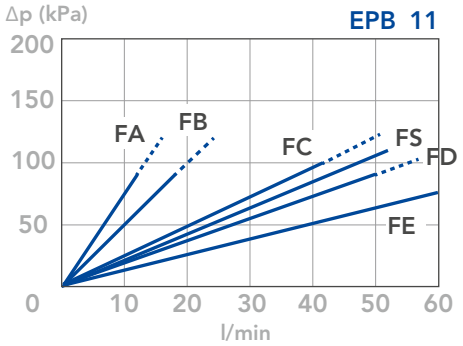

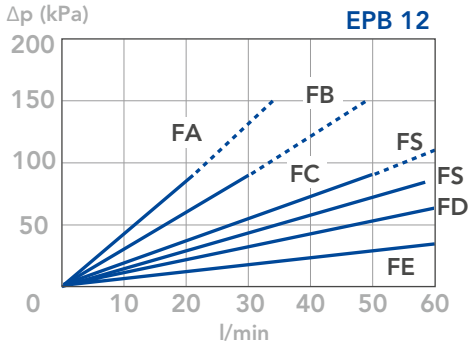



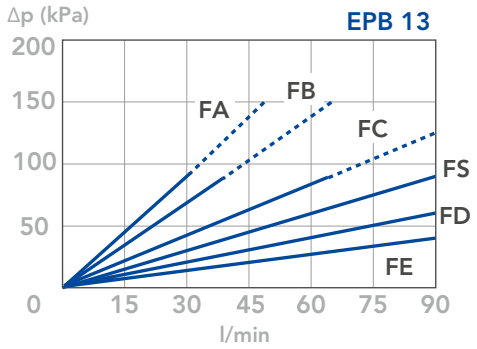

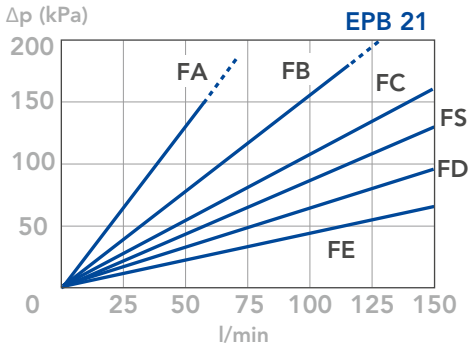

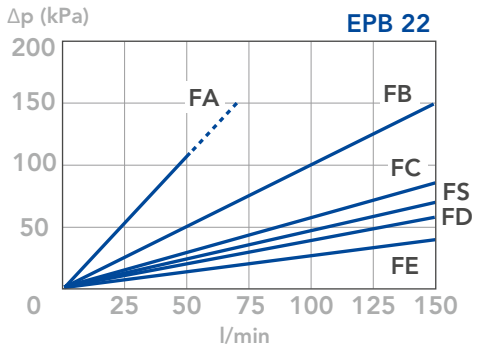

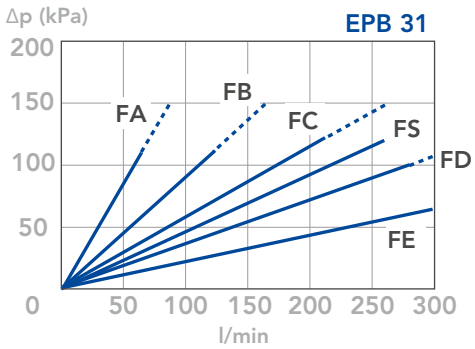

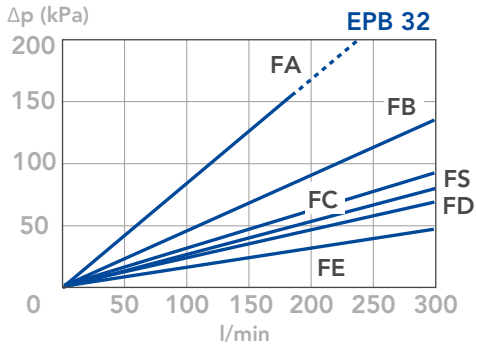

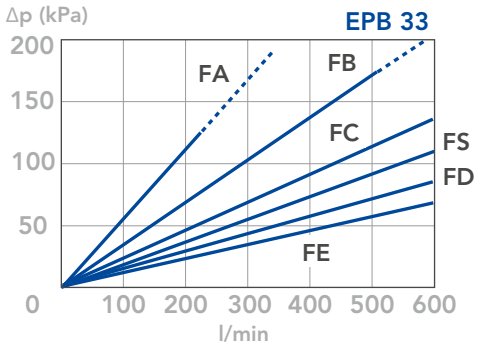

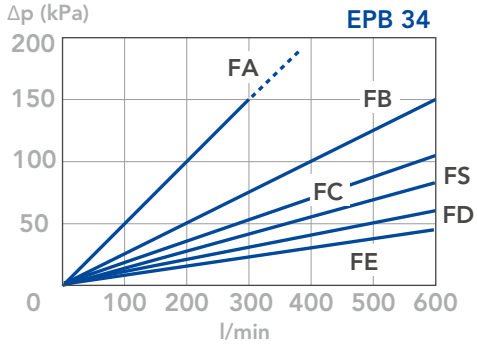

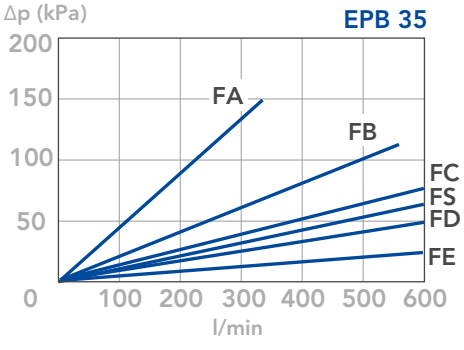

N.B.

All the curves have been obtained with mineral oil having a kinematic viscosity 30 cSt and specific gravity 0,86 Kg/dm3; for fluids with different features, please consider the factors described in the first part of this catalogue. All the curves are obtained from test done at the UFI HYDRAULIC DIVISION Laboratory, according to the specification ISO 3968. In case of discrepancy, please check the contamination level, viscosity and features of the fluid in use.

FPL-SPP
PRESSURE FILTERS



PRESSURE DROP CURVES (ΔP)

CLEAN FILTER ELEMENT PRESSURE DROP WITH H+ MEDIA
(depending both on the internal diameter of the element and on the filter media) - Recommended with no bypass option

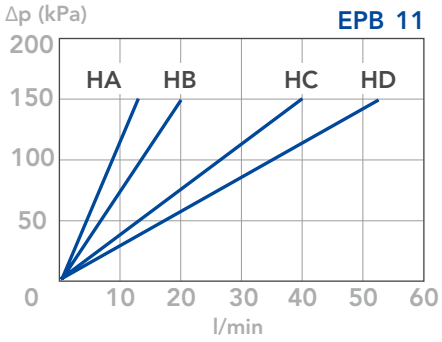

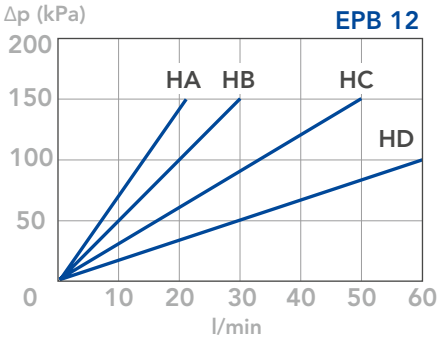

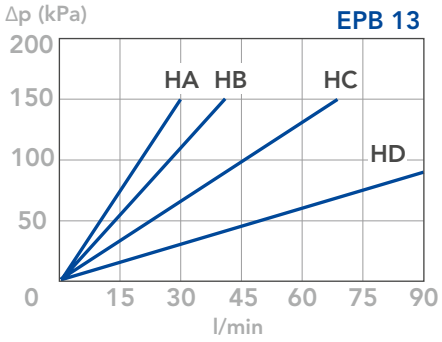

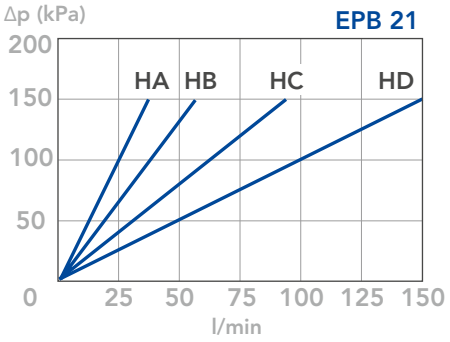

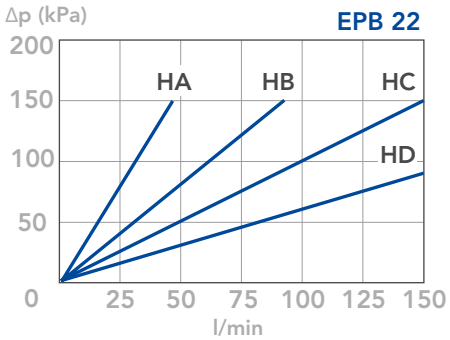

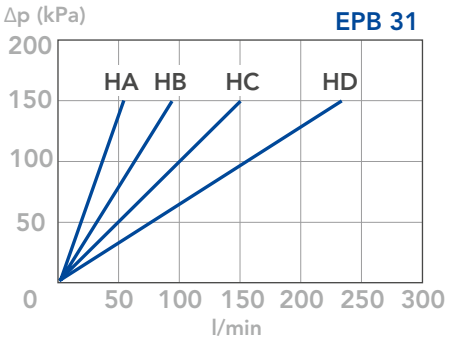

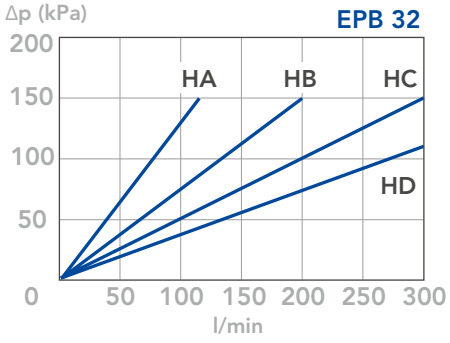

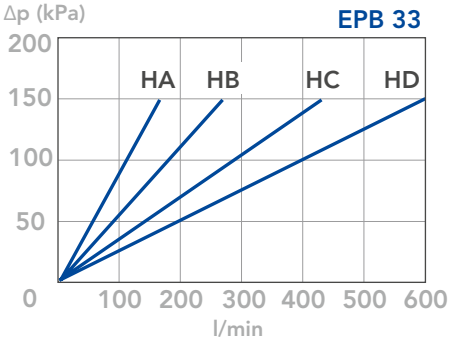



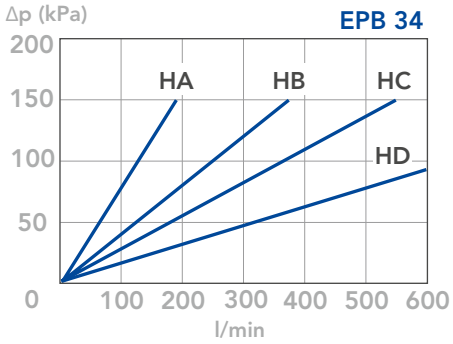

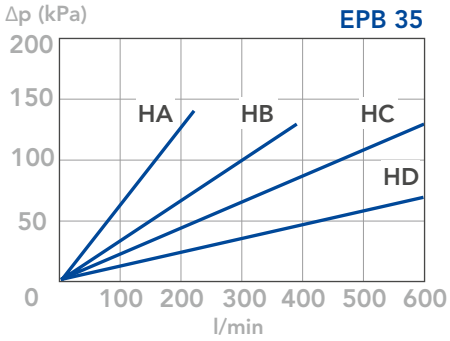

BYPASS VALVE PRESSURE DROP

When selecting the filter size, these curves must be taken into account if it is foreseen that any flow peak is to be absorbed by the bypass valve, it also must be of proper configuration to avoid pressure peaks. The valve pressure drop is directly proportional to fluid specific gravity.

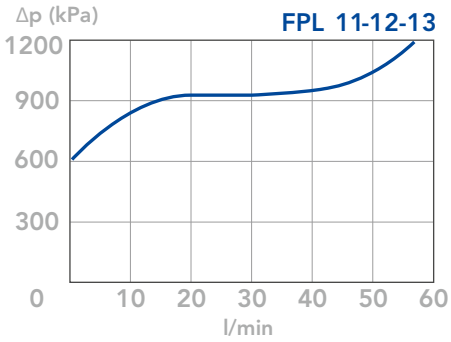

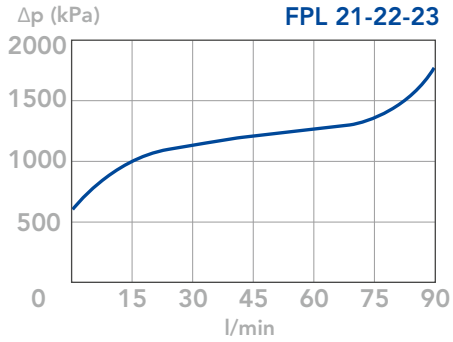

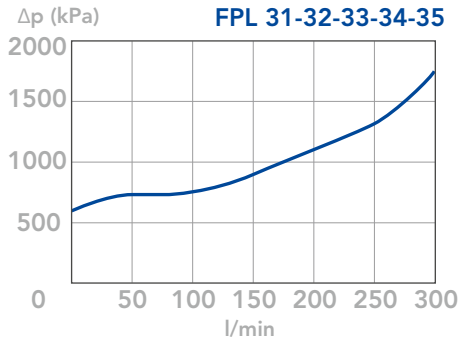

N.B.

All the curves have been obtained with mineral oil having a kinematic viscosity 30 cSt and specific gravity 0,86 Kg/dm3; for fluids with different features, please consider the factors described in the first part of this catalogue. All the curves are obtained from test done at the UFI HYDRAULIC DIVISION Laboratory, according to the specification ISO 3968. In case of discrepancy, please check the contamination level, viscosity and features of the fluid in use.



FPM-SPM
PRESSURE FILTERS



MATERIALS

Housing: Anodized aluminium alloy
Bypass valve: Steel
Seals: NBR Nitrile (FKM - on request fluoroelastomer)
Indicator housing: Brass

PRESSURE

Max working: 21 MPa (210 bar)
Collapse, differential for the filter element (ISO 2941):
2,1 MPa (21 bar)

BYPASS VALVE

Setting: 600 kPa (6 bar) ± 10%

WORKING TEMPERATURE

From -25° to +110° C

COMPATIBILITY (ISO 2943)

Full with fluids: HH-HL-HM-HV-HTG
(according to ISO 6743/4)
For fluids different than the above mentioned,
please contact our Customer Service.



HYDRAULIC DIAGRAM

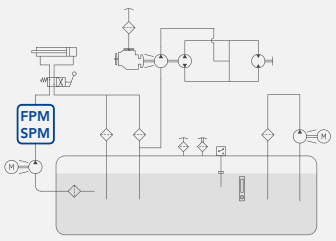

Is this datasheet the latest release? Please check on our website.

FPM
PRESSURE FILTERS

ORDERING AND OPTION CHART

F	P	M	COMPLETE FILTER FAMILY			FILTER ELEMENT FAMILY	E	P	B
			SIZE & LENGHT	21	22	SIZE & LENGHT			
			PORT TYPE						
			B = BSP thread	B	B				
			N = NPT thread	N	N				
			S = SAE thread	S	S				
			PORT SIZE						
			04 = 1/2"	04	04				
			06 = 3/4"	06	06				
			08 = 1"	08	08				
			BYPASS VALVE						
			W = without	W	W				
			C = 600 kPa (6 bar)	C	C				
			SEALS			SEALS			
			N = NBR Nitrile	N	N				
			F = FKM Fluoroelastomer	F	F				
			FILTER MEDIA			FILTER MEDIA			
			FA = fibreglass 5 µm(c) β>1.000	FA	FA				
			FB = fibreglass 7 µm(c) β>1.000	FB	FB				
			FC = fibreglass 12 µm(c) β>1.000	FC	FC				
			FS = fibreglass 16 µm(c) β>1.000	FS	FS				
			FD = fibreglass 21 µm(c) β>1.000	FD	FD				
			FE = fibreglass 30 µm(c) β>1.000	FE	FE				
			CLOGGING INDICATOR**						
			03 = port, plugged	03	03				
			5E = visual differential 500 kPa (5 bar)	5E	5E				
			6E = electrical differential 500 kPa (5 bar)	6E	6E				
			7E = indicator 6E with LED	7E	7E				
			T2 = elect. diff. 500 kPa (5 bar) with thermostat 30°C	T2	T2				
X	X		ACCESSORIES						
			XX = no accessory available	XX	XX				

SPARE PARTS ELEMENTS

FILTER HOUSING	FILTER ELEMENT	CLOGGING INDICATOR
		
B P M C X X	E P B	

SPM
PRESSURE FILTERS

ORDERING AND OPTION CHART

S	P	M	COMPLETE FILTER FAMILY		
			SIZE & LENGHT	301	302
			FILTER MEDIA		
			FT = fibreglass 5 µm(c) β>1.000 Δp 2MPa (20 bar)	FT	FT
			FC = fibreglass 7 µm(c) β>1.000 Δp 2MPa (20 bar)	FC	FC
			FD = fibreglass 12 µm(c) β>1.000 Δp 2MPa (20 bar)	FD	FD
			FS = fibreglass 16 µm(c) β>1.000 Δp 2MPa (20 bar)	FS	FS
			FV = fibreglass 21 µm(c) β>1.000 Δp 2MPa (20 bar)	FV	FV
			SEALS		
			1 = NBR Nitrile	1	1
			2 = FKM Fluoroelastomer	2	2
			BYPASS VALVE		
			S = without	S	S
			C = 600 kPa (6 bar)	C	C
			PORT TYPE		
			B = BSP thread	B	B
			N = NPT thread	N	N
			S = SAE thread	S	S
			PORT SIZE		
			3 = 1/2" (N3 not available)	3	3
			4 = 3/4" (F4 not available)	4	4
			5 = 1" (G5 not available; F5 for FPB2 only)	5	5
			CLOGGING INDICATOR**		
			03 = port, plugged	03	03
			5E = visual differential 500 kPa (5 bar)	5E	5E
			6E = electrical differential 500 kPa (5 bar)	6E	6E
			7E = indicator 6E with LED	7E	7E
			T2 = elect. diff. 500 kPa (5 bar) with thermostat 30°C	T2	T2
X	X		ACCESSORIES		
			XX = no accessory available	XX	XX

FILTER ELEMENT FAMILY	C	C	H
SIZE & LENGHT			
FILTER MEDIA			
SEALS			

SPARE SEAL KIT

	NBR	FKM
FPM21 SPM301	521.0011.2	521.0010.2
FPM22 SPM302	521.0011.2	521.0010.2

NOTE

** When the filter is ordered with FKM seals, the first digit of the indicator code is a letter
(please see Clogging Indicator Chapter for further details)

FPM-SPM
PRESSURE FILTERS

INSTALLATION DRAWING

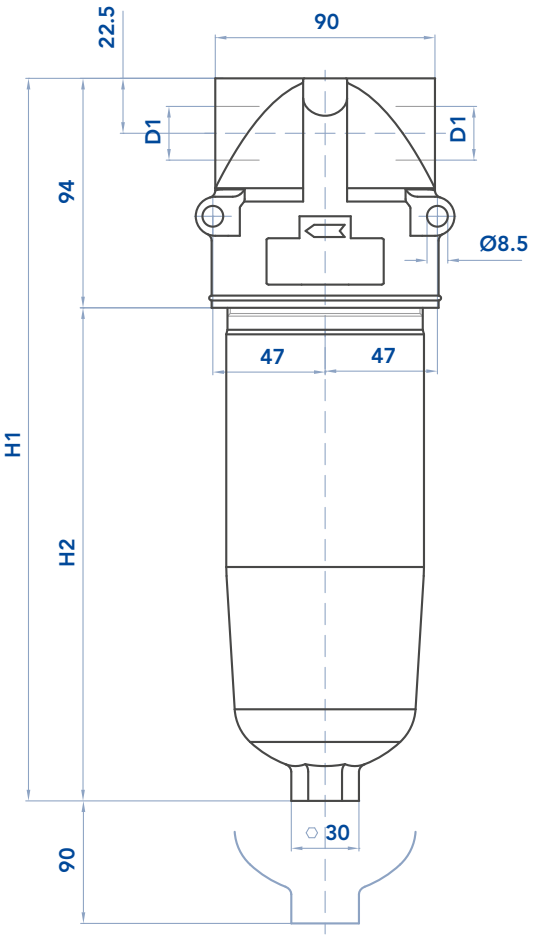

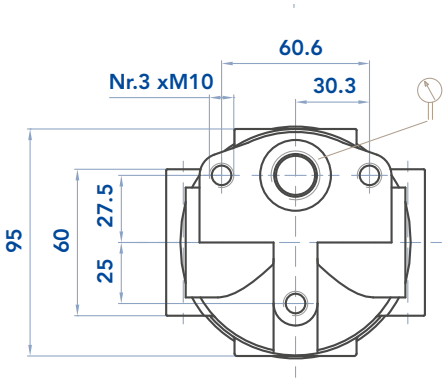

FILTER HOUSING

	D1	H1	H2	R	Kg
FPM21 SPM301	1/2" - 3/4" - 1"	205	111	100	1,5
FPM22 SPM302	1/2" - 3/4" - 1"	298	197	100	2,0



MAINTENANCE

The best time to change your filter element is just before it reaches its maximum dirt-holding capacity. For this reason, we recommend to monitor the pressure of the hydraulic oil flowing through the filter with a clogging indicator. When it is time to change the filter element, switch off the system before opening the filter housing and make sure there is no pressure in the filter. Unscrew the bowl and remove the dirty filter element. Replace it with an original UFI element, verifying the part number on the filter label or on the catalogue. Clean the bowl; check the gaskets conditions and replace if necessary. Insert the clean element into his seat, handling with care and cleanliness. Screw the housing until it stops, with a tightening torque of 60 Nm +5/0.
We recommend the stocking of a spare UFI filter element for timely replacement when required.

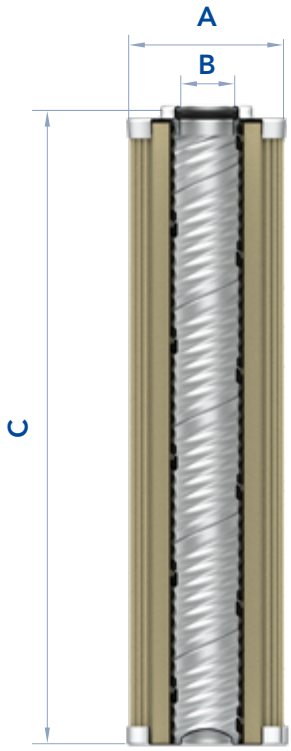



FILTER ELEMENT

	A	B	C	Kg	AREA (cm^2) Media F+
EPB21 CCH301	23,5	52	115	0,25	975
EPB22 CCH302	23,5	52	210	0,25	1.930

The used filter elements cannot be cleaned and are classified as “Dangerous waste material”. They must be disposed according to local laws by authorized Companies.
Verify that the Company you choose has the expertise and authorization to dispose this type of waste material.

FPM-SPM
PRESSURE FILTERS

PRESSURE DROP CURVES (ΔP)

The “Assembly Pressure Drop (Δp)” is obtained by adding the pressure drop values of the Filter Housing and
of the Clean Filter Element corresponding to the considered Flow Rate and it must be lower than 120 kPa (1,2 bar) and should never exceed 1/3 of the bypass valve setting.

FILTER HOUSING PRESSURE DROP
(mainly depending on the port size)

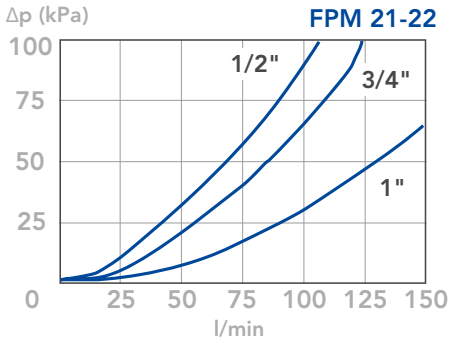

CLEAN FILTER ELEMENT PRESSURE DROP WITH F+ AND C+MEDIA
(depending both on the internal diameter of the element and on the filter media)

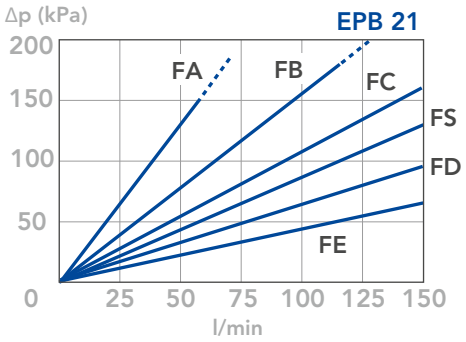

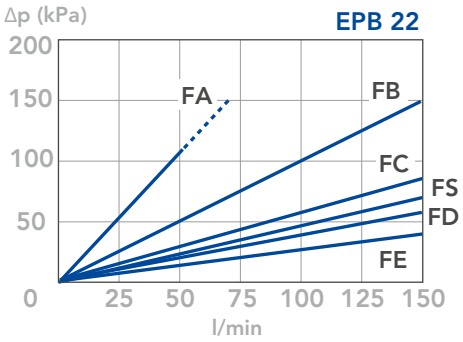

BYPASS VALVE PRESSURE DROP
When selecting the filter size, these curves must be taken into account if it is foreseen that any flow peak is to be absorbed by the bypass valve, it also must be of proper configuration to avoid pressure peaks. The valve pressure drop is directly proportional to fluid specific gravity.

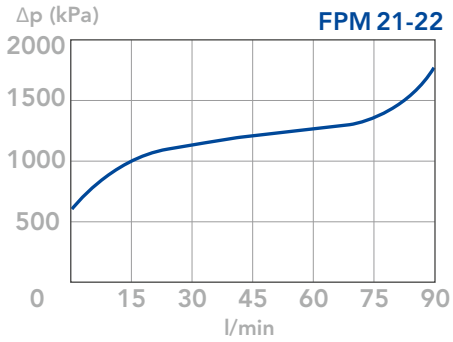

N.B.

All the curves have been obtained with mineral oil having a kinematic viscosity 30 cSt and specific gravity 0,86 Kg/dm3; for fluids with different features, please consider the factors described in the first part of this catalogue. All the curves are obtained from test done at the UFI HYDRAULIC DIVISION Laboratory, according to the specification ISO 3968. In case of discrepancy, please check the contamination level, viscosity and features of the fluid in use.





RETURN FILTERS

RETURN-LINE SAFEGUARDS FLUID CLEANLINESS

Application:
Hydraulic Return-Filters are used on the return-side of the hydraulic-circuit, where the oil re-enters the tank-reservoir.
This type of filter should be sized for the maximum flow of the hydraulic system.
To avoid “foaming” in the reservoir, the return flow-pipe must be located below the liquid level in the tank.
As a general “rule of thumb,” the distance between the bottom of the reservoir-tank and the end of the return-pipe should be more than 2 to 3 times larger than the pipe diameter.

User Benefits:
Space-saving “tank-top” mounting avoids excessive piping.
Externally-mounted filters, keep contamination outside of the tank-reservoir and are often more accessible for filter element replacement.
Main benefits:

- Light-weight / compact-design. Tank-reservoir filling via the filter top-cap
- helps maintain system cleanliness
- Ease of maintenance and filter element replacement
- Filters available with built-in air breathers
- Integral filter element by-pass valves

FRA-RFM
RETURN FILTERS

MATERIALS

Head and cover : Aluminium alloy
Bowl :
Polyammide for FRA21-31-32-33-41
Zinc plated steel for FRA11-42-51-52- 53-5D
Bypass valve: Polyammide
Seals: NBR Nitrile
FKM Fluoroelastomer on request
Indicator housing: Brass

PRESSURE

Max. working: 300 kPa (3 bar)
Collapse, differential for the filter element (ISO 2941): 300 kPa (3 bar)

BYPASS VALVE

Setting: 170 kPa (1,7 bar) ± 10%

WORKING TEMPERATURE

From -25° to +110° C

COMPATIBILITY (ISO 2943)

Full with fluids: HH-HL-HM-HV-HTG
(according to ISO 6743/4)
For fluids different than the above mentioned,
please contact our Customer Service.



HYDRAULIC DIAGRAM

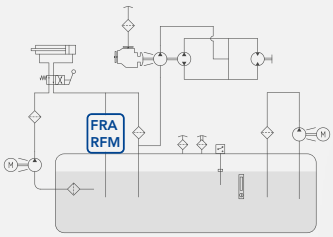

Is this datasheet the latest release? Please check on our website.

FRA
RETURN FILTERS

ORDERING AND OPTION CHART

F	R	A	COMPLETE FILTER FAMILY														FILTER ELEMENT FAMILY	E	R	A
			SIZE & LENGHT	11	21	31	32	33	41	42	51	5A	52	5B	5C	53	5D	SIZE & LENGHT			
			PORT TYPE																		
			B = BSP thread	B	B	B	B	B	B	B	B	B	B	B	B	B	B				
			N = NPT thread	N	N	N	N	N	N	N	N	N	N	N	N	N	N				
			S = SAE thread	-	S	S	S	S	S	S	S	S	S	S	S	S	S				
			F = SAE flange 3000 psi	-	-	-	-	-	-	-	F	F	F	F	F	F	F				
			PORT SIZE																		
			03 = 3/8"	03	-	-	-	-	-	-	-	-	-	-	-	-	-				
			04 = 1/2"	-	04	04	-	-	-	-	-	-	-	-	-	-	-				
			06 = 3/4"	-	-	06	06	06	-	-	-	-	-	-	-	-	-				
			08 = 1"	-	-	-	08	08	08	08	-	-	-	-	-	-	-				
			10 = 1" 1/4 (F10 not available)	-	-	-	-	-	10	10	10	10	10	-	-	-	-				
			12 = 1" 1/2 (** F12 available only for FRA4+ only)	-	-	-	-	-	(*)	(*)	12	12	12	-	-	-	-				
			16 = 2" (F16 not available)	-	-	-	-	-	-	-	16	16	16	16	16	16	16				
			20 = 2" 1/2 (F20 only)	-	-	-	-	-	-	-	20	20	20	20	20	20	20				
			BYPASS VALVE																		
			B = 170 kPa (1,7 bar)	X	B	B	B	B	B	B	B	B	B	B	B	B	B				
			SEALS															SEALS			
			N = NBR Nitrile	N	N	N	N	N	N	N	N	N	N	N	N	N	N				
			F = FKM Fluoroelastomer	F	F	F	F	F	F	F	F	F	F	F	F	F	F				
			FILTER MEDIA															FILTER MEDIA			
			FA = fibreglass 5 µm(c) β>1.000	FA	FA	FA	FA	FA	FA	FA	FA	FA	FA	FA	FA	FA	FA				
			FB = fibreglass 7 µm(c) β>1.000	FB	FB	FB	FB	FB	FB	FB	FB	FB	FB	FB	FB	FB	FB				
			FC = fibreglass 12 µm(c) β>1.000	FC	FC	FC	FC	FC	FC	FC	FC	FC	FC	FC	FC	FC	FC				
			FD = fibreglass 21 µm(c) β>1.000	FD	FD	FD	FD	FD	FD	FD	FD	FD	FD	FD	FD	FD	FD				
			CC = impregnated cellulose 10 µm β>2	CC	CC	CC	CC	CC	CC	CC	CC	CC	CC	CC	CC	CC	CC				
			CD = impregnated cellulose 25 µm β>2	CD	CD	CD	CD	CD	CD	CD	CD	CD	CD	CD	CD	CD	CD				
			ME = wire mesh 60 µm	ME	ME	ME	ME	ME	ME	ME	ME	ME	ME	ME	ME	ME	ME				
			CLOGGING INDICATOR																		
			01 = 1/8" port, plugged	01	01	01	01	01	01	01	01	01	01	01	01	01	01				
			30 = pressure gauge, rear connection	30	30	30	30	30	30	30	30	30	30	30	30	30	30				
			32 = pressure gauge, bottom connection	32	32	32	32	32	32	32	32	32	32	32	32	32	32				
			P1 = SPDT pressure switch	P1	P1	P1	P1	P1	P1	P1	P1	P1	P1	P1	P1	P1	P1				
			ACCESSORIES																		
			W = without	W	W	W	W	W	W	W	W	W	W	W	W	W	W				
			P = with filling plug	P	P	P	P	P	P	P	P	P	P	P	P	P	P				
			ACCESSORIES																		
			X= no other accessory available	X	X	X	X	X	X	X	X	X	X	X	X	X	X				



RFM
RETURN FILTERS

ORDERING AND OPTION CHART

R	F	M	COMPLETE FILTER FAMILY																			FILTER ELEMENT FAMILY	C	R	E
			SIZE & LENGHT	004	008	012	015	020	025	030	040	050	055	060	070	080	100	110	125	150	160				
				004	008	015	015	025	025	030	050	050	055	060	060	080	100	110	125	150	160	SIZE & LENGHT			
			FILTER MEDIA																			FILTER MEDIA			
			FT = fibreglass 5 µm(c) β>1.000	FT	FT	FT	FT	FT	FT	FT	FT	FT	FT	FT	FT	FT	FT	FT	FT	FT	FT				
			FC = fibreglass 7 µm(c) β>1.000	FC	FC	FC	FC	FC	FC	FC	FC	FC	FC	FC	FC	FC	FC	FC	FC	FC	FC				
			FD = fibreglass 12 µm(c) β>1.000	FD	FD	FD	FD	FD	FD	FD	FD	FD	FD	FD	FD	FD	FD	FD	FD	FD	FD				
			FV = fibreglass 21 µm(c) β>1.000	FV	FV	FV	FV	FV	FV	FV	FV	FV	FV	FV	FV	FV	FV	FV	FV	FV	FV				
			CD = impregnated cellulose 10 µm β>2	CD	CD	CD	CD	CD	CD	CD	CD	CD	CD	CD	CD	CD	CD	CD	CD	CD	CD				
			CV = impregnated cellulose 25 µm β>2	CV	CV	CV	CV	CV	CV	CV	CV	CV	CV	CV	CV	CV	CV	CV	CV	CV	CV				
			MS = wire mesh 60 µm	MS	MS	MS	MS	MS	MS	MS	MS	MS	MS	MS	MS	MS	MS	MS	MS	MS	MS				
			SEALS																			SEALS			
			1 = NBR Nitrile	1	1	1	1	1	1	1	1	1	1	1	1	1	1	1	1	1	1				
			2 = FKM Fluoroelastomer	2	2	2	2	2	2	2	2	2	2	2	2	2	2	2	2	2	2				
			BYPASS VALVE																						
			B = 170 kPa (1,7 bar)	X	B	B	B	B	B	B	B	B	B	B	B	B	B	B	B	B	B				
			PORT TYPE																						
			B = BSP thread	B	B	B	B	B	B	B	B	B	B	B	B	B	B	B	B	B	B				
			N = NPT thread	N	N	N	N	N	N	N	N	N	N	N	N	N	N	N	N	N	N				
			S = SAE thread	S	S	S	S	S	S	S	S	S	S	S	S	S	S	S	S	S	S				
			F = SAE flange 3000 psi	-	-	-	-	-	-	-	-	-	-	-	-	-	-	F	F	F	F				
			PORT SIZE																						
			2 = 3/8"	2	-	-	-	-	-	-	-	-	-	-	-	-	-	-	-	-	-				
			3 = 1/2"	-	3	3	-	-	-	-	-	-	-	-	-	-	-	-	-	-	-				
			4= 3/4"	-	-	-	4	4	-	-	-	-	-	-	-	-	-	-	-	-	-				
			5 = 1"	-	-	-	-	-	5	5	5	-	-	-	-	-	-	-	-	-	-				
			6 = 1" 1/4 (F6 not available)	-	-	-	-	-	-	-	-	6	6	6	-	-	-	-	-	-	-				
			7 = 1" 1/2	-	-	-	-	-	-	-	-	-	-	-	7	7	7	-	-	-	-				
			8 = 2" (F8 not available)	-	-	-	-	-	-	-	-	-	-	-	-	-	-	8	8	8	8				
			9 = 2" 1/2 (F9 only)	-	-	-	-	-	-	-	-	-	-	-	-	-	-	9	9	9	9				
			CLOGGING INDICATOR																						
			01 = 1/8" port, plugged	01	01	01	01	01	01	01	01	01	01	01	01	01	01	01	01	01	01				
			30 = pressure gauge, rear connection	30	30	30	30	30	30	30	30	30	30	30	30	30	30	30	30	30	30				
			32 = pressure gauge, cottom connection	32	32	32	32	32	32	32	32	32	32	32	32	32	32	32	32	32	32				
			P1 = SPDT pressure switch	P1	P1	P1	P1	P1	P1	P1	P1	P1	P1	P1	P1	P1	P1	P1	P1	P1	P1				
			ACCESSORIES																						
			S = without	S	S	S	S	S	S	S	S	S	S	S	S	S	S	S	S	S	S				
			T = with filling plug	T	T	T	T	T	T	T	T	T	T	T	T	T	T	T	T	T	T				
		X	ACCESSORIES																						
			X= no other accessory available	X	X	X	X	X	X	X	X	X	X	X	X	X	X	X	X	X	X				



FRA
RETURN FILTERS

SPARE PARTS ELEMENTS

FILTER HOUSING	FILTER ELEMENT	CLOGGING INDICATOR	ACCESSORIES
			
B R A ☐ ☐ ☐ ☐ B ☐ ■ ■ ☐ ☐ ☐ X	E R A ☐ ☐ ☐ ☐ ☐	☐ ☐	☐ X

SPARE SEAL KIT

	NBR	FKM
FRA11 RFM004	521.0032.2	521.0039.2
FRA21 RFM008	521.0012.2	521.0040.2
FRA31 RFM012-015	521.0013.2	521.0041.2
FRA32 RFM020-025	521.0013.2	521.0041.2
FRA33 RFM030	521.0013.2	521.0041.2
FRA41 RFM040-050	521.0014.2	521.0043.2
FRA42 RFM055	521.0014.2	521.0043.2
FRA51 RFM060-070	521.0015.2	521.0044.2
FRA5A RFM080	521.0015.2	521.0044.2
FRA52 RFM100	521.0015.2	521.0044.2
FRA5B RFM110	521.0015.2	521.0044.2
FRA5C RFM125	521.0015.2	521.0044.2
FRA53 RFM150	521.0015.2	521.0044.2
FRA5D RFM160	521.0015.2	521.0044.2

SPARE SPRING

FRA11 RFM004	008.0032.1
FRA21 RFM008	008.0149.1
FRA31 RFM012-015	008.0003.1
FRA32 RFM020-025	008.0003.1
FRA33 RFM030	008.0003.1
FRA41 RFM040-050	008.0151.1
FRA42 RFM055	008.0151.1
FRA51 RFM060-070	008.0028.1
FRA5A RFM080	008.0028.1
FRA52 RFM100	008.0028.1
FRA5B RFM110	008.0028.1
FRA5C RFM125	008.0028.1
FRA53 RFM150	008.0028.1
FRA5D RFM160	008.0028.1

RFM
RETURN FILTERS

INSTALLATION DRAWING

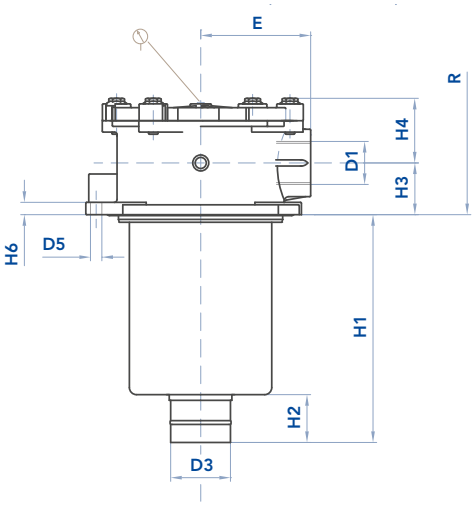

FRA 11-21-31-32-33
RFM 004-008-012-015-020-025-030

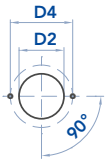

Tank mounting pattern

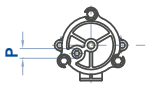

FRA 41-42
RFM 040-050--055

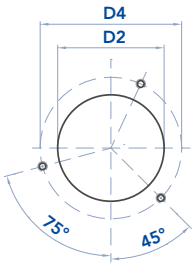

Tank mounting pattern

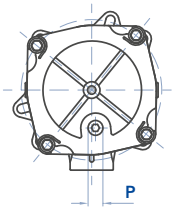

FRA 51-5A-52-5B-5C-53-5D
RFM 060-070-080-100-110-125-150-160

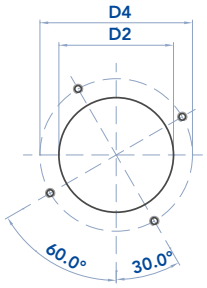

Tank mounting pattern

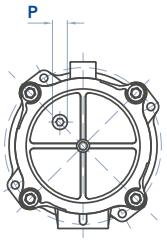

FILTER HOUSING

	D1	min D2	max D2	D3	D4	D5	E	H1	H2	H3	H4	H6	P	R	Kg
FRA11 RFM004	3/8"	50	50	12	80	6,5	40	59	16	12	33	9	1/8"	90	0,30
FRA21 RFM008	1/2"	67	68	24	90	6,5	50	80	20	22	33	9	3/8"	120	0,45
FRA31 RFM012-015	1/2"-3/4"	89	90	28	115	9	67	102	25	28	47	10	3/8"	150	0,80
FRA32 RFM020-025	3/4" - 1"	89	90	28	115	9	67	150	25	28	47	10	3/8"	190	0,95
FRA33 RFM030	3/4" - 1"	89	90	40	115	9	67	234	30	28	47	10	3/8"	270	1,10
FRA41 RFM040-050	1" - 1"1/4 - 1"1/2	126	131	40	175	10,5	95	248	50	35	56	13	1/2"	289	2,10
FRA42 RFM055	1" - 1"1/4 - 1"1/2	126	131	40	175	10,5	95	265	30	35	56	13	1/2"	306	2,30
FRA51 RFM060-070	1"1/4 - 1"1/2 - 2" - 2"1/2	174	180	50	220	10,5	115	178	50	55	69	13	1/2"	250	3,10
FRA5A RFM080	1"1/4 - 1"1/2 - 2" - 2"1/2	174	180	50	220	10,5	115	240	50	55	69	13	1/2"	315	3,50
FRA52 RFM100	1"1/4 - 1"1/2 - 2" - 2"1/2	174	180	63,5	220	10,5	115	240	50	55	69	13	1/2"	315	3,60
FRA5B RFM110	2" - 2"1/2	174	180	63,5	220	10,5	115	240	50	55	69	13	1/2"	315	3,65
FRA5C RFM125	2" - 2"1/2	174	180	63,5	220	10,5	115	240	50	55	69	13	1/2"	250	3,65
FRA53 RFM150	2" - 2"1/2	174	180	63,5	220	10,5	115	285	50	55	69	13	1/2"	355	4,10
FRA5D RFM160	2" - 2"1/2	174	180	63,5	220	10,5	115	300	50	55	69	13	1/2"	370	4,30

FRA-RFM
RETURN FILTERS





MAINTENANCE

The best time to change your filter element is just before it reaches its maximum dirt-holding capacity. For this reason, we recommend to monitor the pressure of the hydraulic oil flowing through the filter with a clogging indicator. When it is time to change the filter element, switch off the system before opening the filter housing. Unscrew the cover of the filter head and remove the spring (to be hold) and the dirty filter element. Replace it with an original UFI element, verifying the part number on the filter label or on the catalogue. Clean the bowl; check the gaskets conditions and replace if necessary. Insert the clean element and the spring into his seat, handling with care and cleanliness. Replace the cover on the filter head with the screw.
We recommend the stocking of a spare UFI filter element for timely replacement when required.

FILTER ELEMENT

					AREA (cm^2)		
	A	B	C	Kg	Media F+	Media C+	Media M+
ERA11 CRE004	38	13	50	0,05	270	345	270
ERA21 CRE008	52	24	70	0,10	310	380	240
ERA31 CRE015	70	28	85	0,20	620	990	460
ERA32 CRE025	70	28	130	0,25	1.000	1.600	740
ERA33 CRE030	70	40	210	0,40	1.660	2.670	1.220
ERA41 CRE050	99	40	211	0,75	3.800	4.280	1.900
ERA42 CRE055	99	40	250	0,90	4.550	5.100	2.270
ERA51 CRE060	130	51	140	1,00	4.140	4.360	1.800
ERA5A CRE080	130	51	200	1,10	5.840	6.460	2.730
ERA52 CRE100	130	63	200	1,35	6.190	6.520	2.690
ERA5B CRE110	130	63	200	1,45	7.070	7.200	3.900
ERA5C CRE125	130	65,5	232	1,50	7.280	7.600	3.040
ERA53 CRE150	130	63	251	1,55	7.930	8.350	3.450
ERA5D CRE160	130	63	266	1,60	8.400	8.800	3.730

The used filter elements cannot be cleaned and are classified as “Dangerous waste material”. They must be disposed according to local laws by authorized Companies.
Verify that the Company you choose has the expertise and authorization to dispose this type of waste material.



PRESSURE DROP CURVES (ΔP)

The “Assembly Pressure Drop (Δp)” is obtained by adding the pressure drop values of the Filter Housing and of the Clean Filter Element corresponding to the considered Flow Rate and it must be lower than 50 kPa (0,5 bar) and should never exceed 1/3 of the bypass valve setting.

FILTER HOUSING PRESSURE DROP
(mainly depending on the port size)

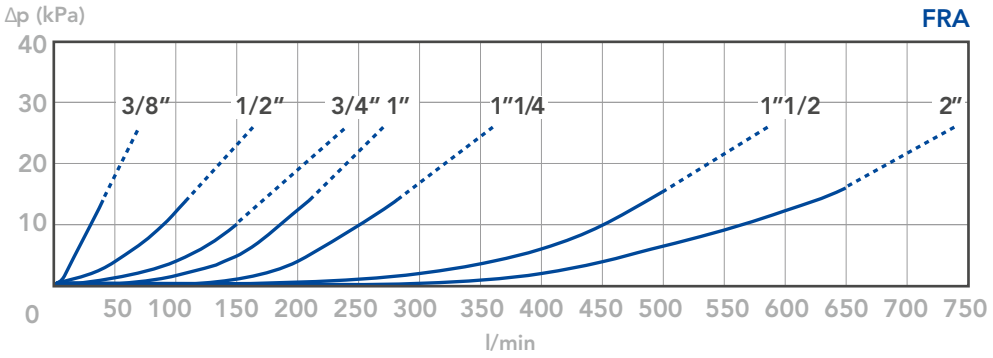

CLEAN FILTER ELEMENT PRESSURE DROP
(pressure drop values of the elements by ME - MF - MG media are very similar)

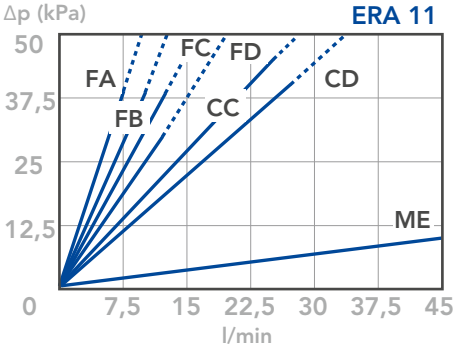

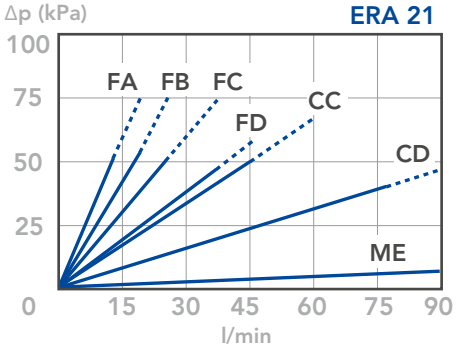

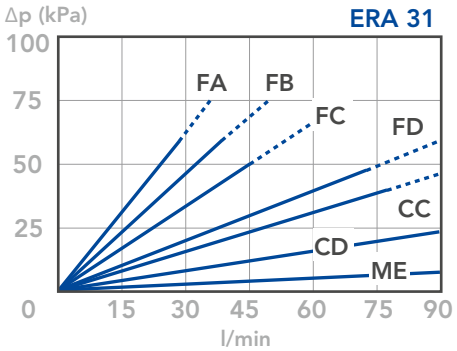

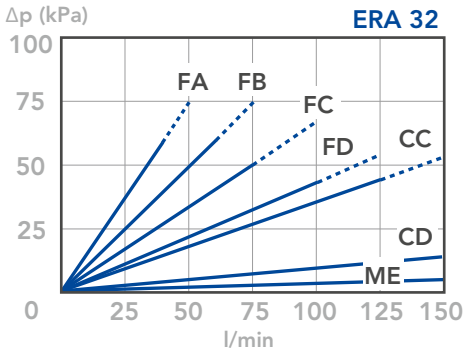

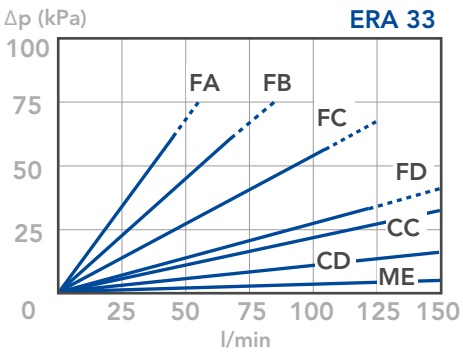

FRA-RFM
RETURN FILTERS

BYPASS VALVE PRESSURE DROP

When selecting the filter size, these curves must be taken into account if it is foreseen that any flow peak is to be absorbed by the bypass valve, it also must be of proper configuration to avoid pressure peaks. The valve pressure drop is directly proportional to fluid specific gravity.

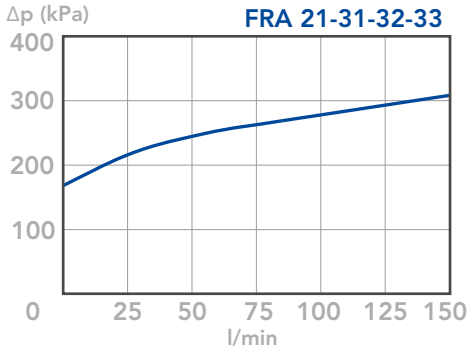

CLEAN FILTER ELEMENT PRESSURE DROP

(pressure drop values of the elements by ME - MF - MG media are very similar)

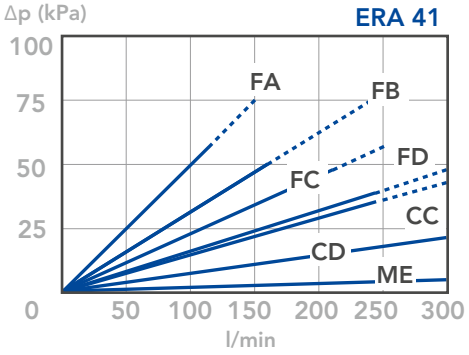

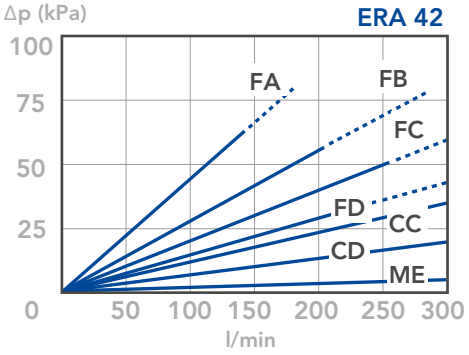

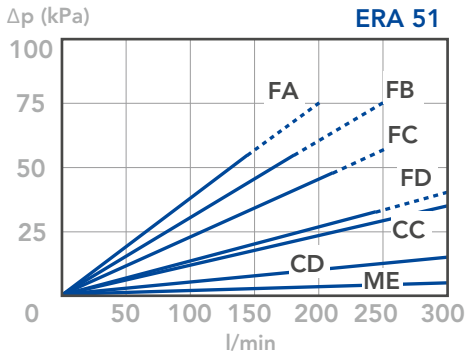

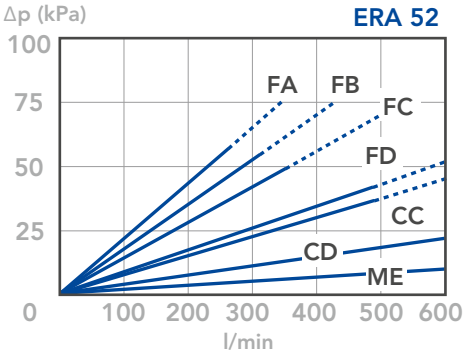



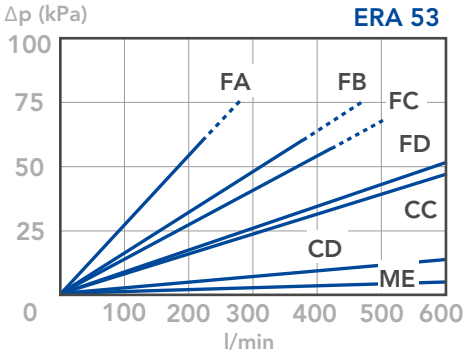

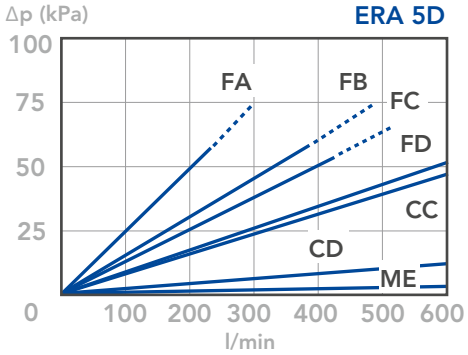

BYPASS VALVE PRESSURE DROP

When selecting the filter size, these curves must be taken into account if it is foreseen that any flow peak is to be absorbed by the bypass valve, it also must be of proper configuration to avoid pressure peaks. The valve pressure drop is directly proportional to fluid specific gravity.

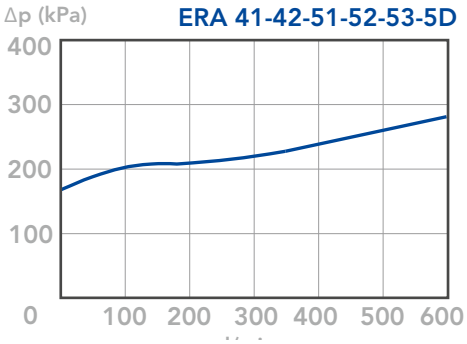



FRB-RFA
RETURN FILTERS



MATERIALS

Head : Aluminium alloy
Cover and Bowl :Polyammide
Bypass valve: Polyammide
Seals: NBR Nitrile
Indicator housing: Brass

PRESSURE

Max. working: 700 kPa (7 bar)
Collapse, differential for the filter element (ISO 2941):
300 kPa (3 bar)

BYPASS VALVE

Setting: 170 kPa (1,7 bar) ± 10%

WORKING TEMPERATURE

From -25° to +110° C

COMPATIBILITY (ISO 2943)

Full with fluids: HH-HL-HM-HV-HTG
(according to ISO 6743/4)
For fluids different than the above mentioned,
please contact our Customer Service.



HYDRAULIC DIAGRAM

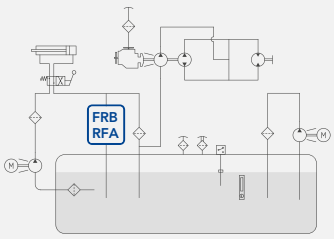

Is this datasheet the latest release? Please check on our website.

FRB
RETURN FILTERS

ORDERING AND OPTION CHART

F	R	B	COMPLETE FILTER FAMILY					FILTER ELEMENT FAMILY	E	R	B
			SIZE & LENGHT	11	21	22	23	SIZE & LENGHT			
			PORT TYPE								
			B = BSP thread	B	B	B	B				
			N = NPT thread	N	N	N	N				
			S = SAE thread	S	S	S	S				
			PORT SIZE								
			04 = 1/2"	04	-	-	-				
			06 = 3/4"	06	06	06	06				
			08 = 1"	-	08	08	08				
		B	BYPASS VALVE								
			B = 170 kPa (1,7 bar)- 250 kPa (2,5 bar) for media F+	B	B	B	B				
		N	SEALS					SEALS	N		
			N = NBR Nitrile	N	N	N	N				
			FILTER MEDIA					FILTER MEDIA			
			FA = fibreglass 5 µm(c) β>1.000	FA	FA	FA	FA				
			FB = fibreglass 7 µm(c) β>1.000	FB	FB	FB	FB				
			FC = fibreglass 12 µm(c) β>1.000	FC	FC	FC	FC				
			FD = fibreglass 21 µm(c) β>1.000	FD	FD	FD	FD				
			CC = impregnated cellulose 10 µm β>2	CC	CC	CC	CC				
			CD = impregnated cellulose 25 µm β>2	CD	CD	CD	CD				
			CLOGGING INDICATOR								
			05 = nr. 2 x 1/8" ports, plugged	05	05	05	05				
			30 = pressure gauge, rear connection	30	30	30	30				
			P4 = SPDT pressure switch	P4	P4	P4	P4				
			P6 = SPDT pressure switch	P6	P6	P6	P6				
			ACCESSORIES								
			W = without	W	W	W	W				
			C = with polyester air breather	C	C	C	C				
			D = with metal air breather	D	D	D	D				
			ACCESSORIES								
			W = without	W	W	W	W				
			H = with dipstick	H	H	H	H				

SPARE PARTS ELEMENTS

FILTER HOUSING	FILTER ELEMENT	CLOGGING INDICATOR	ACCESSORIES

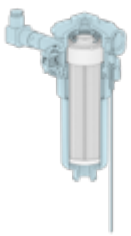







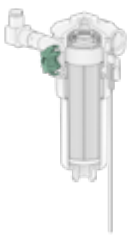

B	R	B						B	N					

E	R	B			N		



RFA
RETURN FILTERS

ORDERING AND OPTION CHART

R	F	A	COMPLETE FILTER FAMILY					FILTER ELEMENT FAMILY	C	R	A
			SIZE & LENGHT	110	210	220	230	SIZE & LENGHT			
			FILTER MEDIA					FILTER MEDIA			
			FT = fibreglass 5 µm(c) β>1.000	FT	FT	FT	FT				
			FC = fibreglass 7 µm(c) β>1.000	FC	FC	FC	FC				
			FD = fibreglass 12 µm(c) β>1.000	FD	FD	FD	FD				
			FV = fibreglass 21 µm(c) β>1.000	FV	FV	FV	FV				
			CD = impregnated cellulose 10 µm β>2	CD	CD	CD	CD				
			CV = impregnated cellulose 25 µm β>2	CV	CV	CV	CV				
		1	SEALS					SEALS	1		
			1 = NBR Nitrile	1	1	1	1				
		B	BYPASS VALVE								
			B = 170 kPa (1,7 bar)- 250 kPa (2,5 bar) for media F+	B	B	B	B				
			PORT TYPE								
			B = BSP thread	B	B	B	B				
			N = NPT thread	N	N	N	N				
			S = SAE thread	S	S	S	S				
			PORT SIZE								
			3 = 1/2"	3	-	-	-				
			4 = 3/4"	4	4	4	4				
			5 = 1"	-	5	5	5				
			CLOGGING INDICATOR								
			05 = nr. 2 x 1/8" ports, plugged	05	05	05	05				
			30 = pressure gauge, rear connection	30	30	30	30				
			P4 = SPDT pressure switch	P4	P4	P4	P4				
			P6 = SPDT pressure switch	P6	P6	P6	P6				
			ACCESSORIES								
			S = without	S	S	S	S				
			C = with polyester air breather	C	C	C	C				
			D = with metal air breather	D	D	D	D				
			ACCESSORIES								
			S = without	S	S	S	S				
			H = with dipstick	H	H	H	H				

SPARE SEAL KIT

	NRB
FRB11 RFA110	521.0016.2
FRB21 RFA210	521.0017.2
FRB22 RFA220	521.0017.2
RB23 RFA230	521.0017.2

SPARE SPRING

FRA11 RFM004	008.0208.1
FRA21 RFM008	008.3014.1
FRA31 RFM012-015	008.3014.1
FRA32 RFM020-025	008.3014.1

FRB-RFA
RETURN FILTERS

INSTALLATION DRAWING

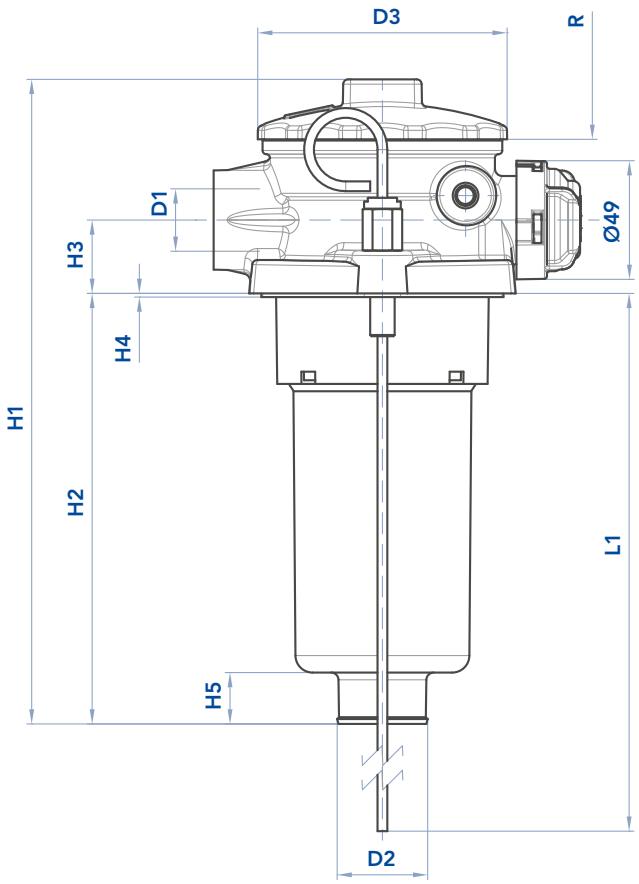

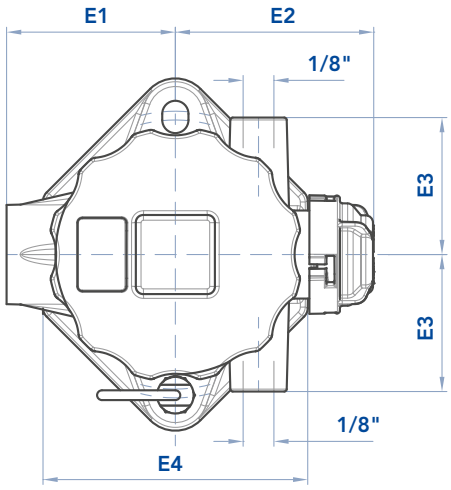

Tank mounting pattern

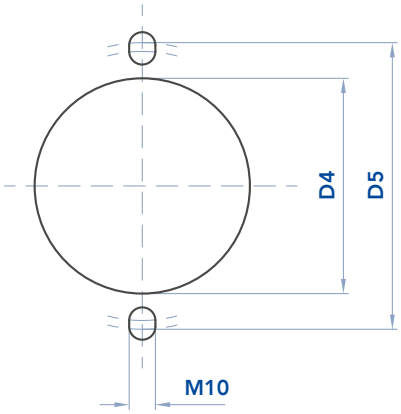

FILTER HOUSING

	D1	D2	D3	D4	D5	E1	E2	E3	E4	H1	H2	H3	H4	H5	L1	R	Kg
FRB11 RFA110	1/2"-3/4"	28	75	60÷63	82÷88	50	70	28	77	243	178	24	2	16	380	220	0,40
FRB21 RFA210	3/4" - 1"	36	104	87÷91	110÷115	70	83	37	108	200	110	30	1,5	22	370	190	0,84
FRB22 RFA220	3/4" - 1"	36	104	87÷91	110÷115	70	83	37	108	265	175	30	1,5	22	370	240	0,87
FRB23 RFA230	3/4" - 1"	36	104	87÷91	110÷115	70	83	37	108	365	275	30	1,5	22	370	350	0,92



MAINTENANCE

The best time to change your filter element is just before it reaches its maximum dirt-holding capacity. For this reason, we recommend to monitor the pressure of the hydraulic oil flowing through the filter with a clogging indicator. When it is time to change the filter element, switch off the system before opening the filter housing. Unscrew the cover of the filter head and remove the spring (to be hold) and the dirty filter element. Replace it with an original UFI element, verifying the part number on the filter label or on the catalogue. Clean the bowl; check the gaskets conditions and replace if necessary. Insert the clean element and the spring into his seat, handling with care and cleanliness. Replace the cover on the filter head with the screw.
We recommend the stocking of a spare UFI filter element for timely replacement when required.

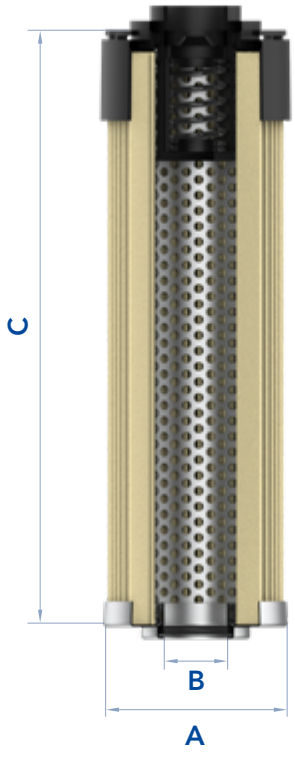

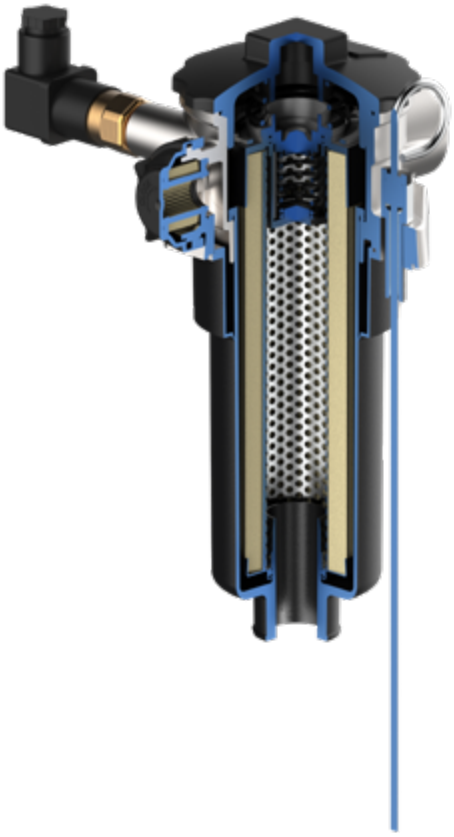

FILTER ELEMENT

					AREA (cm^2)	
	A	B	C	Kg	Media F+	MediaC+
ERB11 CRA110	43	20	200	0,20	1.225	1.225
ERB21 CRA210	59	28	134	0,30	1.500	1.500
ERB22 CRA220	59	28	200	0,40	2.295	2.295
ERB23 CRA230	59	28	300	0,50	3.495	3.495

The used filter elements cannot be cleaned and are classified as “Dangerous waste material”. They must be disposed according to local laws by authorized Companies.
Verify that the Company you choose has the expertise and authorization to dispose this type of waste material.

FRB-RFA
RETURN FILTERS



PRESSURE DROP CURVES (ΔP)

The "Assembly Pressure Drop (Δp)" is obtained by adding the pressure drop values of the Filter Housing and of the Clean Filter Element corresponding to the considered Flow Rate and it must be lower than 50 kPa (0,5 bar) and should never exceed 1/3 of the bypass valve setting.

FILTER HOUSING PRESSURE DROP
(mainly depending on the port size)

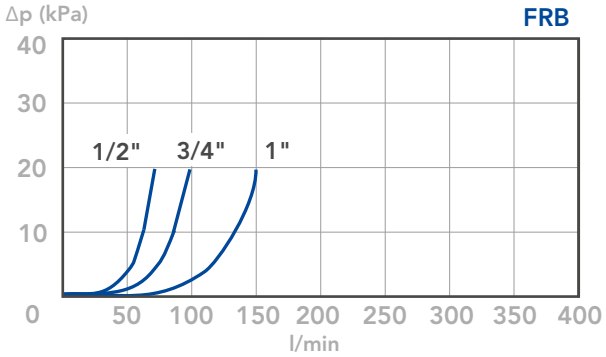

CLEAN FILTER ELEMENT PRESSURE DROP WITH F+ AND C+ MEDIA
(depending both on the internal diameter of the element and on the filter media)

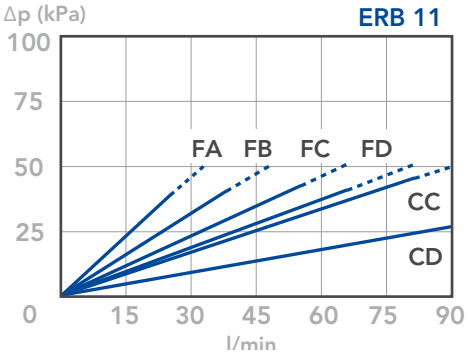

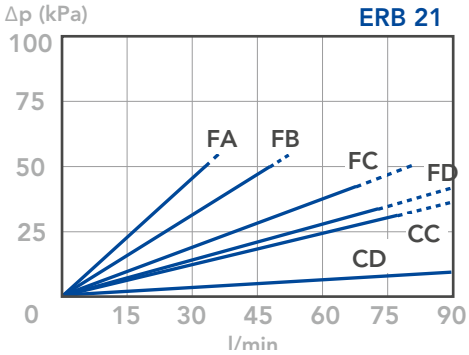

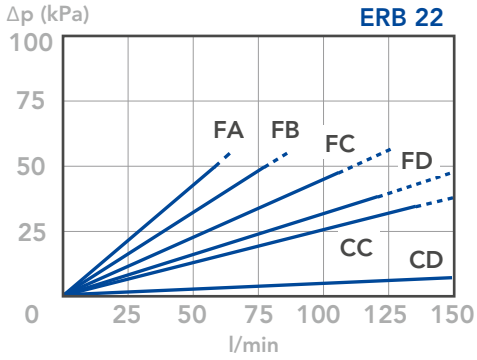

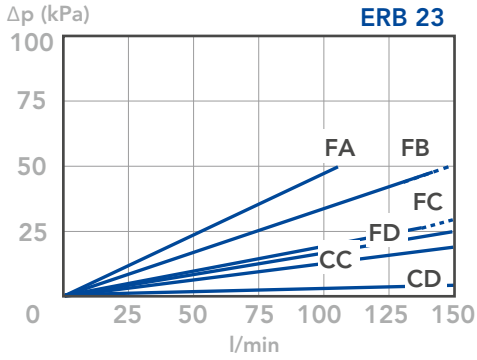

BYPASS VALVE PRESSURE DROP
When selecting the filter size, these curves must be taken into account if it is foreseen that any flow peak is to be absorbed by the bypass valve, it also must be of proper configuration to avoid pressure peaks. The valve pressure drop is directly proportional to fluid specific gravity.

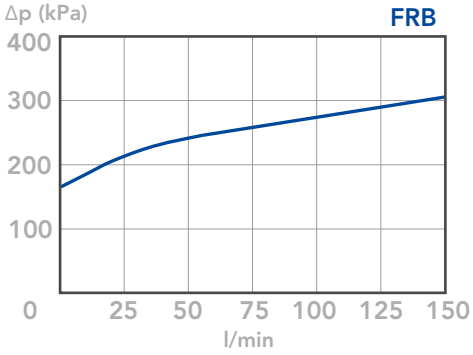

N.B.

All the curves have been obtained with mineral oil having a kinematic viscosity 30 cSt and specific gravity 0,86 Kg/dm3; for fluids with different features, please consider the factors described in the first part of this catalogue. All the curves are obtained from test done at the UFI HYDRAULIC DIVISION Laboratory, according to the specification ISO 3968. In case of discrepancy, please check the contamination level, viscosity and features of the fluid in use.

FRC-MAR
RETURN FILTERS



MATERIALS

Head : Aluminium alloy
Spin-on cartridge: Steel
Bypass valve: Polyammide
Seals: NBR Nitrile
Indicator housing: Brass

PRESSURE

Max. working: 700 kPa (7 bar)
Collapse, differential for the filter element (ISO 2941):
300 kPa (3 bar)

BYPASS VALVE

Setting: 170 kPa (1,7 bar) ± 10%

WORKING TEMPERATURE

From -25° to +110° C

COMPATIBILITY (ISO 2943)

Full with fluids: HH-HL-HM-HV-HTG
(according to ISO 6743/4)
For fluids different than the above mentioned,
please contact our Customer Service.



HYDRAULIC DIAGRAM

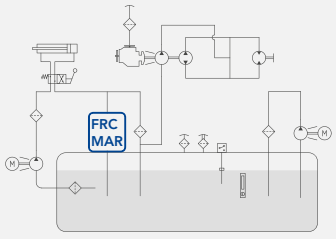

Is this datasheet the latest release? Please check on our website.



FRC
RETURN FILTERS

ORDERING AND OPTION CHART

F	R	C	COMPLETE FILTER FAMILY					FILTER ELEMENT FAMILY	E	R	C
			SIZE & LENGHT	11	12	21	22	SIZE & LENGHT			
		B	PORT TYPE								
			B = BSP thread	B	B	B	B				
			PORT SIZE								
			06 = 3/4"	06	06	-	-				
			12 = 1"1/2	-	-	12	12				
		B	BYPASS VALVE								
			B = 170 kPa (1,7 bar) with anti-drain membrane	B	B	B	B				
		N	SEALS					SEALS	N		
			N = NBR Nitrile	N	N	N	N				
			FILTER MEDIA					FILTER MEDIA			
			FB = fibreglass 7 µm(c) β>1.000	FB	FB	FB	FB				
			FC = fibreglass 12 µm(c) β>1.000	FC	FC	FC	FC				
			FD = fibreglass 21 µm(c) β>1.000	FD	FD	FD	FD				
			CC = impregnated cellulose 10 µm β>2	CC	CC	CC	CC				
			CD = impregnated cellulose 25 µm β>2	CD	CD	CD	CD				
			CLOGGING INDICATOR								
			05 = nr. 2 x 1/8" ports, plugged	05	05	05	05				
			30 = pressure gauge, rear connection	30	30	30	30				
			P1 = SPDT pressure switch	P1	P1	P1	P1				
X	X		ACCESSORIES								
			XX = no accessory available	XX	XX	XX	XX				

SPARE PARTS ELEMENTS

FILTER HOUSING	FILTER ELEMENT	CLOGGING INDICATOR
		
B R C B B N X X	E R C N	

MAR
RETURN FILTERS

ORDERING AND OPTION CHART

M	A	R	COMPLETE FILTER FAMILY					FILTER ELEMENT FAMILY	C	C	A
			SIZE & LENGHT	151	152	301	302	SIZE & LENGHT			
			FILTER MEDIA					FILTER MEDIA			
			FT = fibreglass 5 µm(c) β>1.000	FT	FT	FT	FT				
			FC = fibreglass 7 µm(c) β>1.000	FC	FC	FC	FC				
			FD = fibreglass 12 µm(c) β>1.000	FD	FD	FD	FD				
			FV = fibreglass 21 µm(c) β>1.000	FV	FV	FV	FV				
			CD = impregnated cellulose 10 µm β>2	CD	CD	CD	CD				
			CV = impregnated cellulose 25 µm β>2	CV	CV	CV	CV				
		1	SEALS					SEALS	1		
			1 = NBR Nitrile	1	1	1	1				
		M	BYPASS VALVE								
			M = 170 kPa (1,7 bar) with anti-drain membrane	M	M	M	M				
		B	PORTS								
			B = BSP thread	B	B	B	B				
			PORT SIZE								
			4 = 3/4"	4	4	-	-				
			7 = 1" 1/2	-	-	7	7				
			CLOGGING INDICATOR								
			05 = nr. 2 x 1/8" ports, plugged	05	05	05	05				
			30 = pressure gauge, rear connection	30	30	30	30				
			P1 = SPDT pressure switch	P1	P1	P1	P1				
			ACCESSORIES								
			XX = no accessory available	XX	XX	XX	XX				

SPARE SEAL KIT

	NBR
FRC11 MAR151	521.0018.2
FRC12 MAR152	521.0018.2
FRC21 MAR301	521.0036.2
FRC22 MAR302	521.0036.2

FRC-MAR
RETURN FILTERS

INSTALLATION DRAWING

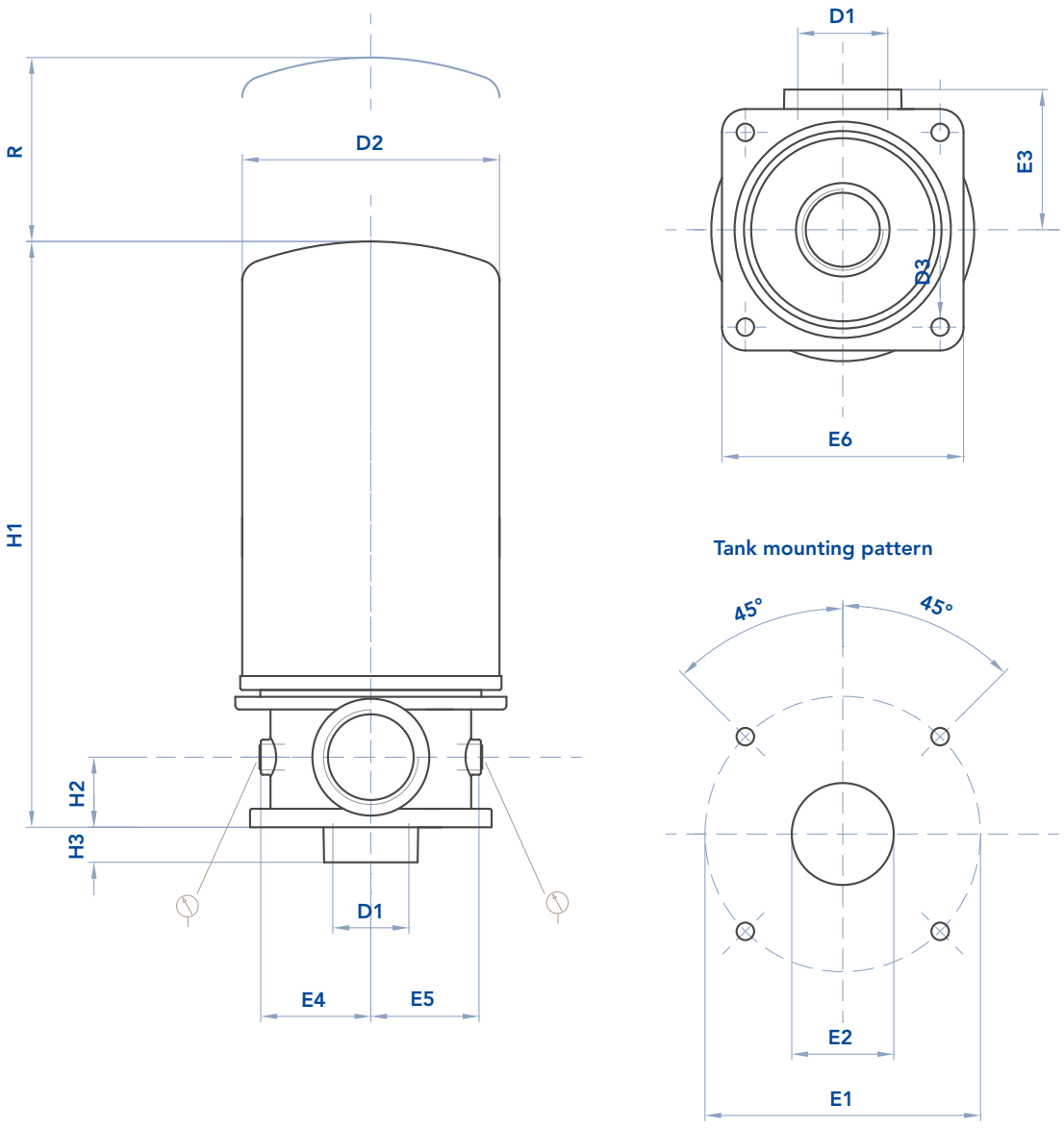

FILTER HOUSING

	D1	D2	D3	H1	H2	H3	E1	E2	E3	E4	E5	E6	R	Kg
FRC11 MAR151	3/4"	96	7	196	25	18	99	40÷45	50	38	38	90	15	1,3
FRC12 MAR152	3/4"	96	7	241	25	18	99	40÷45	50	38	38	90	15	1,6
FRC21 MAR301	1"1/2	129	9	252	36	18	141	65÷70	72	56	56	124	30	2,1
FRC22 MAR302	1"1/2	129	9	297	36	18	141	65÷70	72	56	56	124	30	2,2



MAINTENANCE

The best time to change your filter element is just before it reaches its maximum dirt-holding capacity. For this reason, we recommend to monitor the pressure of the hydraulic oil flowing through the filter with a clogging indicator. When it is time to change the filter element, switch off the system. Remove the dirty filter element. Replace it with an original UFI element, verifying the part number on the filter label or on the catalogue. Lubricate the spin-on gasket, screw on the head until it stops and tighten by turning it 3/4 of a turn.
We recommend the stocking of a spare UFI filter element for timely replacement when required.

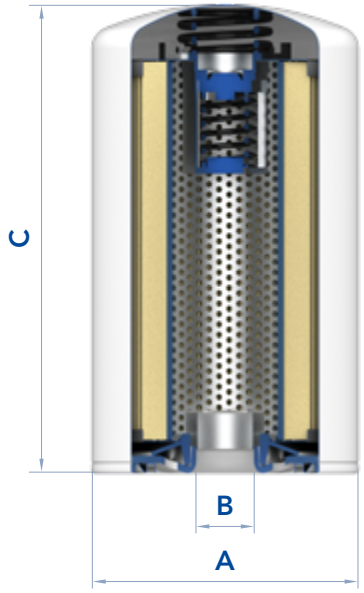

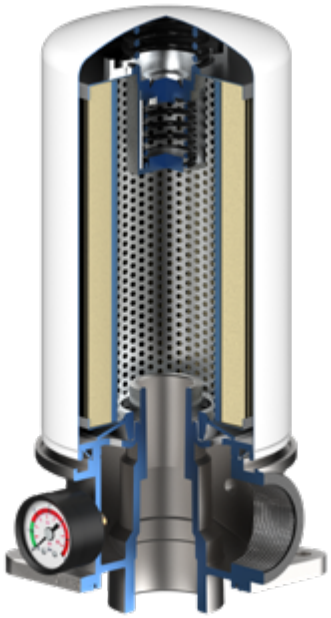

FILTER ELEMENT

	A	B	C	Kg	AREA (cm^2) Media F+	Media C+
ERC11 CCA151...M	96,5	3/4" BSP	146	1,00	2.140	3.305
ERC12 CCA152...M	96,5	3/4" BSP	191	1,20	3.630	4.745
ERC21 CCA301...M	129	1"1/4 BSP	181	1,40	4.450	5.560
ERC22 CCA302...M	129	1"1/4 BSP	226	1,50	5.890	7.360

The used filter elements cannot be cleaned and are classified as “Dangerous waste material”. They must be disposed according to local laws by authorized Companies.
Verify that the Company you choose has the expertise and authorization to dispose this type of waste material.

FRC-MAR
RETURN FILTERS

PRESSURE DROP CURVES (ΔP)

The “Assembly Pressure Drop (Δp)” is obtained by adding the pressure drop values of the Filter Housing and of the Clean Filter Element corresponding to the considered Flow Rate and it must be lower than 50 kPa (0,5 bar) and should never exceed 1/3 of the bypass valve setting.

FILTER HOUSING PRESSURE DROP
(mainly depending on the port size)

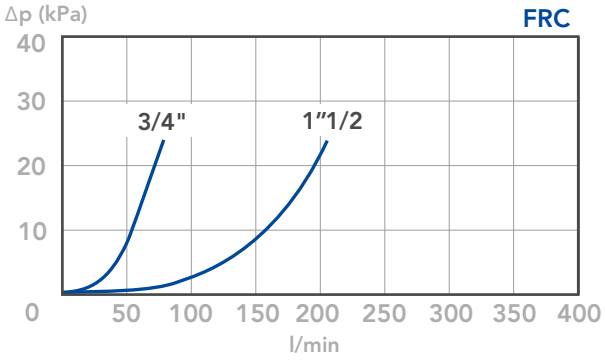

CLEAN FILTER ELEMENT PRESSURE DROP WITH F+ AND C+ MEDIA
(depending both on the internal diameter of the element and on the filter media)

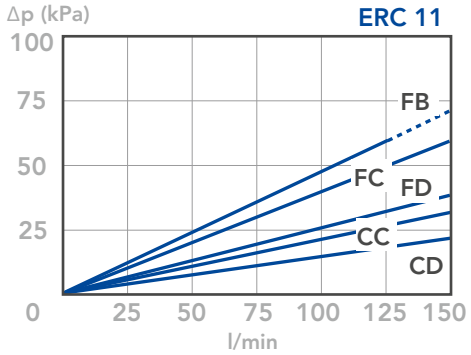

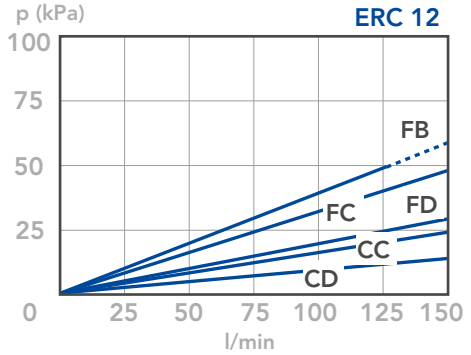

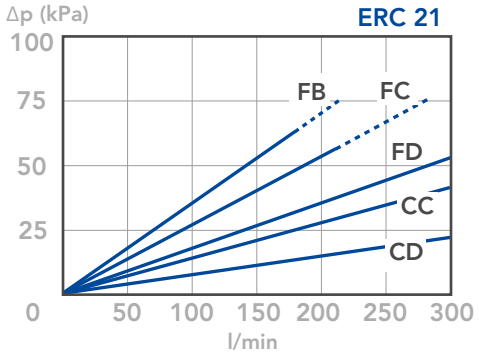

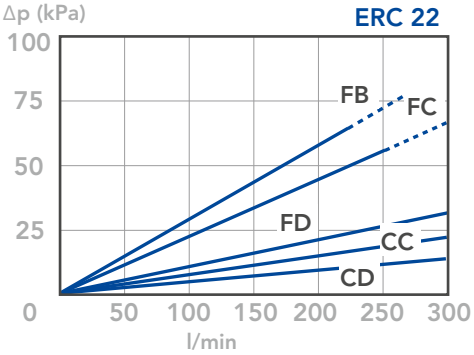



BYPASS VALVE PRESSURE DROP

When selecting the filter size, these curves must be taken into account if it is foreseen that any flow peak is to be absorbed by the bypass valve, it also must be of proper configuration to avoid pressure peaks. The valve pressure drop is directly proportional to fluid specific gravity.

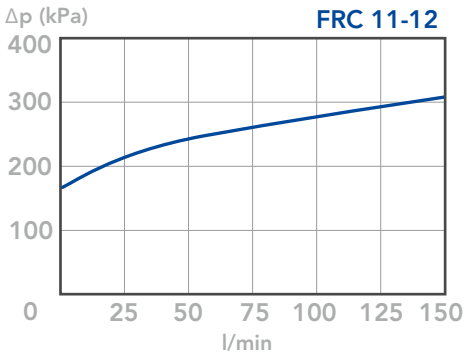

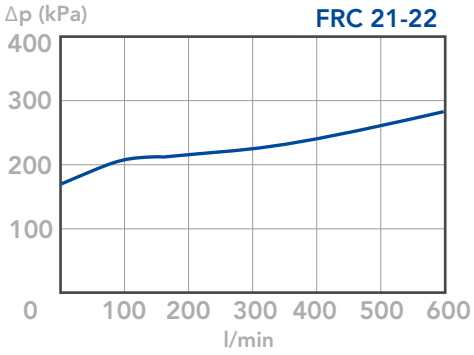

N.B.

All the curves have been obtained with mineral oil having a kinematic viscosity 30 cSt and specific gravity 0,86 Kg/dm3; for fluids with different features, please consider the factors described in the first part of this catalogue. All the curves are obtained from test done at the UFI HYDRAULIC DIVISION Laboratory, according to the specification ISO 3968. In case of discrepancy, please check the contamination level, viscosity and features of the fluid in use.



FRD-MRH
RETURN FILTERS

MATERIALS

Cover & housing: Anodized aluminium alloy
For 61&62 only:
Cover: anodized aluminium alloy
Housing: steel
Bypass valve: Steel
Seals: NBR Nitrile (FKM - on request fluoroelastomer)
Indicator housing: Brass

PRESSURE

Max. working: 2 MPa (20 bar)
Collapse, differential for the filter element (ISO 2941):
1 MPa (10 bar)

BYPASS VALVE

Setting: 300 kPa (3 bar) ± 10%

WORKING TEMPERATURE

From -25° to +110° C

COMPATIBILITY (ISO 2943)

Full with fluids: HH-HL-HM-HV-HTG
(according to ISO 6743/4)
For fluids different than the above mentioned,
please contact our Customer Service.



HYDRAULIC DIAGRAM

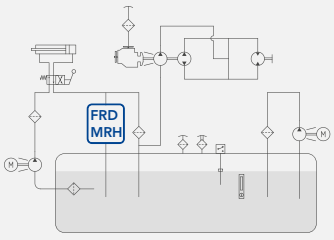

Is this datasheet the latest release? Please check on our website.

FRD
RETURN FILTERS

ORDERING AND OPTION CHART

F	R	D	COMPLETE FILTER FAMILY								FILTER ELEMENT FAMILY	E	R	D
			SIZE & LENGHT	11	21	31	41	51	61	62	SIZE & LENGHT			
			PORT TYPE											
			B = BSP thread	B	B	B	B	B	-	-				
			N = NPT thread	N	N	N	N	N	-	-				
			S = SAE thread	S	S	S	S	S	-	-				
			F = SAE flange 3000 psi,metric screw	-	-	F	F	F	F	F				
			PORT SIZE											
			04 = 1/2"	04	-	-	-	-	-	-				
			06 = 3/4"	-	06	-	-	-	-	-				
			08 = 1"	-	-	08		-	-	-				
			12 = 1" 1/2	-	-	-	12	-	-	-				
			20 = 2" 1/2	-	-	-	-	20	-	-				
			28 = 3" 1/2	-	-	-	-	-	28	-				
			32 = 4"	-	-	-	-	-	-	32				
			BYPASS VALVE											
			W = without	W	W	W	W	W	W	W				
			D = 300 kPa (3 bar)	D	D	D	D	D	D	D				
			SEALS								SEALS			
			N = NBR Nitrile	N	N	N	N	N	N	N				
			F = FKM Fluoroelastomer	F	F	F	F	F	F	F				
			FILTER MEDIA								FILTER MEDIA			
			FA = fibreglass 5 µm(c) β>1.000	FA	FA	FA	FA	FA	FA	FA				
			FB = fibreglass 7 µm(c) β>1.000	FB	FB	FB	FB	FB	FB	FB				
			FC = fibreglass 12 µm(c) β>1.000	FC	FC	FC	FC	FC	FC	FC				
			FD = fibreglass 21 µm(c) β>1.000	FD	FD	FD	FD	FD	FD	FD				
			CC = impregnated cellulose 10 µm β>2	CC	CC	CC	CC	CC	CC	CC				
			CD = impregnated cellulose 25 µm β>2	CD	CD	CD	CD	CD	CD	CD				
			MD = wire mesh 25 µm	MD	MD	MD	MD	MD	MD	MD				
			ME = wire mesh 60 µm	ME	ME	ME	ME	ME	ME	ME				
			WR = water removal *	-	-	WR	WR	WR	WR	WR				
			CLOGGING INDICATOR**											
			03 = port, plugged	03	03	03	03	03	03	03				
			5C = visual differential 200 kPa (2 bar)	5C	5C	5C	5C	5C	5C	5C				
			6C = electrical differential 200 kPa (2 bar)	6C	6C	6C	6C	6C	6C	6C				
			7C = indicator 6C with LED	7C	7C	7C	7C	7C	7C	7C				
			T1 = elect. diff. 200 kPa (2 bar) with thermostat 30°C	T1	T1	T1	T1	T1	T1	T1				
X	X		ACCESSORIES											
			XX= no other accessory available	XX	XX	XX	XX	XX	XX	XX				



MRH
RETURN FILTERS

ORDERING AND OPTION CHART

M	R	H	COMPLETE FILTER FAMILY							FILTER ELEMENT FAMILY	C	R	H
			SIZE & LENGHT	008	015	025	070	150	250	SIZE & LENGHT			
			FILTER MEDIA							FILTER MEDIA			
			FT = fibreglass 5 µm(c) β>1.000	FT	FT	FT	FT	FT	FT				
			FC = fibreglass 7 µm(c) β>1.000	FC	FC	FC	FC	FC	FC				
			FD = fibreglass 12 µm(c) β>1.000	FD	FD	FD	FD	FD	FD				
			FV = fibreglass 21 µm(c) β>1.000	FV	FV	FV	FV	FV	FV				
			CD = impregnated cellulose 10 µm β>2	CD	CD	CD	CD	CD	CD				
			CV = impregnated cellulose 25 µm β>2	CV	CV	CV	CV	CV	CV				
			MV = wire mesh 25 µm	MV	MV	MV	MV	MV	MV				
			MS = wire mesh 60 µm	MS	MS	MS	MS	MS	MS				
			WR = water removal *	WR	WR	WR	WR	WR	WR				
			SEALS							SEALS			
			1 = NBR Nitrile	1	1	1	1	1	1				
			2 = FKM Fluoroelastomer	2	2	2	2	2	2				
			BYPASS VALVE										
			S = without	S	S	S	S	S	S				
			D = 300 kPa (3 bar)	D	D	D	D	D	D				
			PORT TYPE										
			B = BSP thread	B	B	B	B	B	-				
			N = NPT thread	N	N	N	N	N	-				
			S = SAE thread	S	S	S	S	S	-				
			F = SAE flange 3000 psi,metric screw	-	-	F	F	F	F				
			PORT SIZE										
			3 = 1/2"	3	-	-	-	-	-				
			4= 3/4"	-	4	-	-	-	-				
			5 = 1"	-	-	5	-	-	-				
			7 = 1" 1/2	-	-	-	7	-	-				
			9 = 2" 1/2	-	-	-	-	9	-				
			B = 3" 1/2	-	-	-	-	-	B				
			CLOGGING INDICATOR**										
			03 = port, plugged	03	03	03	03	03	03				
			5C = visual differential 200 kPa (2 bar)	5C	5C	5C	5C	5C	5C				
			6C = electrical differential 200 kPa (2 bar)	6C	6C	6C	6C	6C	6C				
			7C = indicator 6C with LED	7C	7C	7C	7C	7C	7C				
			T1 = elect. diff. 200 kPa (2 bar) with thermostat 30°C	T1	T1	T1	T1	T1	T1				
X	X		ACCESSORIES										
			XX= no other accessory available	XX	XX	XX	XX	XX	XX				

NOTES

* Water removal media - see “hydro dry” brochure

** When the filter is ordered with FKM seals, the first digit of the indicator code is a letter
(please see Clogging Indicator Chapter for further details)

FRD-MRH
RETURN FILTERS



SPARE PARTS ELEMENTS

FILTER HOUSING	FILTER ELEMENT	CLOGGING INDICATOR
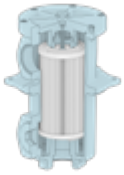		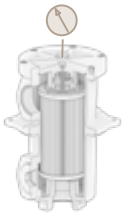
B R D _ _ _ _ _ _ _ ■ ■ _ _ X X	E R D _ _ _ _ _ _	_ _

SPARE SEAL KIT

	NBR	FKM
FRD11 MRH008	521.0045.2	521.0050.2
FRD21 MRH015	521.0046.2	521.0051.2
FRD31 MRH025	521.0047.2	521.0052.2
FRD41 MRH070	521.0031.2	521.0019.2
FRD51 MRH150	521.0048.2	521.0053.2
FRD61 MRH250	521.0049.2	521.0054.2
FRD62	521.0049.2	521.0094.2



INSTALLATION DRAWING

FRD 11-21-31-41-51
MRH 008-015-025-070-150

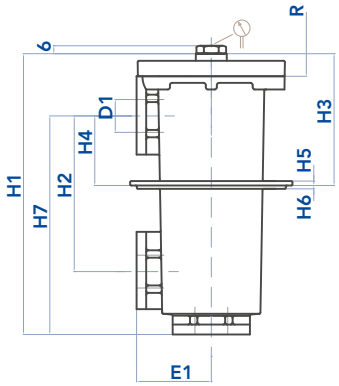

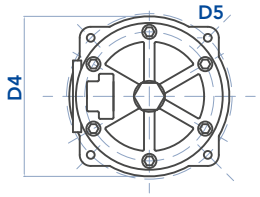

Tank mounting pattern

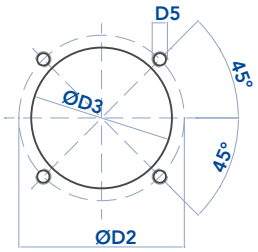

FRD 61-62
MRH 250

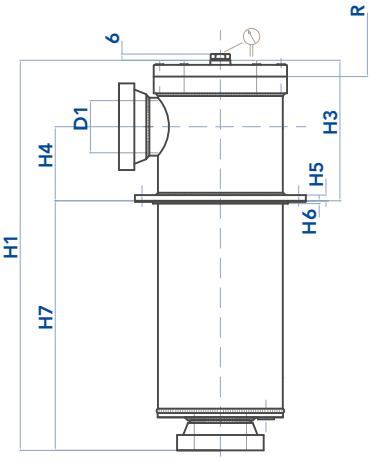

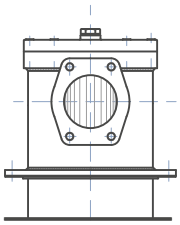

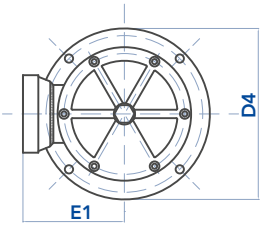

Tank mounting pattern

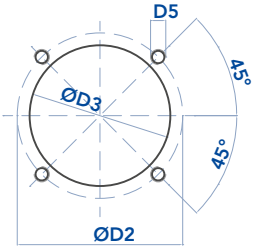

FILTER HOUSING

	D1	D2	D3	D4	D5	E1	H1	H2	H3	H4	H5	H6	H7	R	Kg
FRD11 MRH008	1/2"	95	85	90	M5	43	160	62,5	96	31,5	4	3	96	105	1,30
FRD21 MRH015	3/4"	138	123	128	M6	57	191	105	100	52	6	3	145	110	2,6
FRD31 MRH025	1"	154	137	147	M6	67	250	140	117	63	8	4	197	155	3,7
FRD41 MRH070	1"1/2	180	164	174	M8	82	343	177	155	82	8	4	269	240	6,5
FRD51 MRH150	2"1/2	275	239	254	M10	117,5	420	218	192	91	10	8	320	275	14,2
FRD61 MRH250	3"1/2	275	239	300	M12	178	673	-	248	130	10	5	-	525	49,0
FRD62*	4"	275	239	300	M12	178	1.108	-	423*	255	10	5	950	1.020	70,0

NOTES

* adjustable for FRD62 only- loose flange (to be welded)

FRD-MRH
RETURN FILTERS

MAINTENANCE

The best time to change your filter element is just before it reaches its maximum dirt-holding capacity. For this reason, we recommend to monitor the pressure of the hydraulic oil flowing through the filter with a clogging indicator. When it is time to change the filter element, switch off the system.
Unscrew the cover and remove it. If the filter has a by-pass valve, don't touch it.

Remove the dirty filter element using the upper handle. Replace it with an original UFI element, verifying the part number on the filter label or on the catalogue. Lubricate the gaskets for an optimal assembly. Position the cover carefully to ensure the seal on the filter element. Tighten the screws with the washers until it stops.
We recommend the stocking of a spare UFI filter element for timely replacement when required.

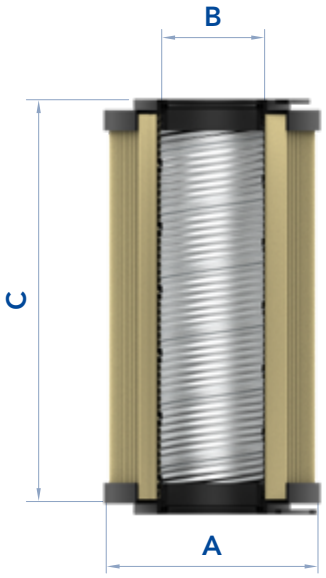

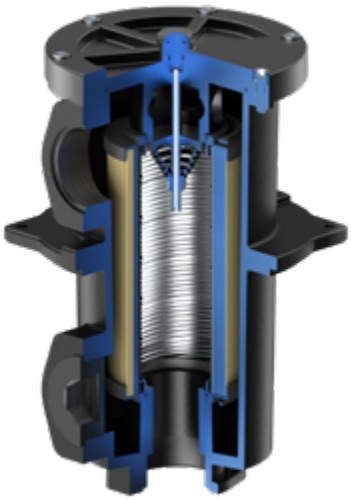

FILTER ELEMENT

					AREA (cm²)		
	A	B	C	Kg	Media F+	Media C+	Media M+
ERD11 CRH008	52	28/24	70	0,10	310	380	245
ERD21 CRH015	70	34	85	0,20	620	990	460
ERD31 CRH025	70	34	130	0,25	1.000	1.600	740
ERD41 CRH070	99	51	211	0,70	3.800	4.280	2.330
ERD51 CRH150	130	74	251	1,50	7.930	8.350	3.340
ERD61 CRH250	130	74/85	500	2,00	16.720	17.600	9.860
ERD62	143	96,3	896	3,80	40.000	40.000	22.000

The used filter elements cannot be cleaned and are classified as "Dangerous waste material". They must be disposed according to local laws by authorized Companies.
Verify that the Company you choose has the expertise and authorization to dispose this type of waste material.

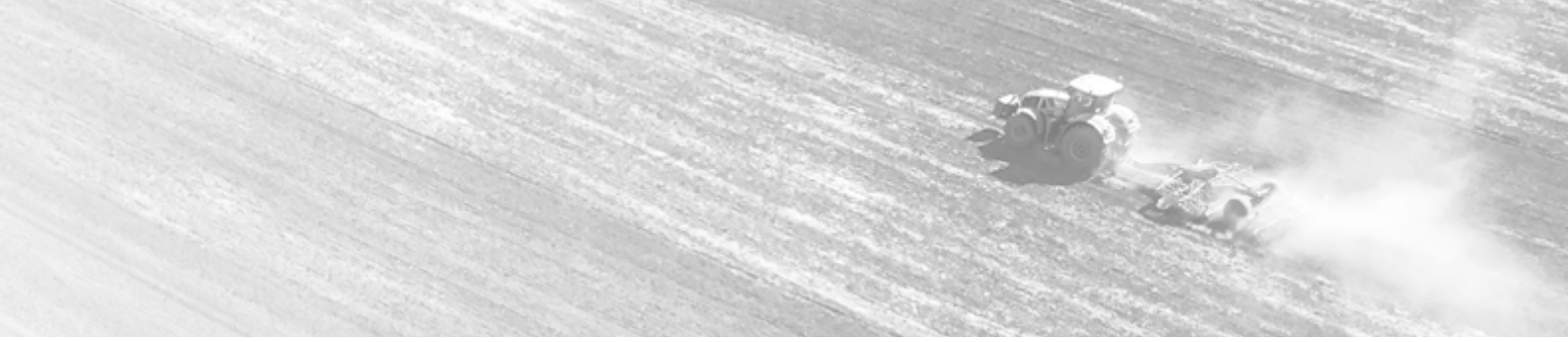

PRESSURE DROP CURVES (ΔP)

The “Assembly Pressure Drop (Δp)” is obtained by adding the pressure drop values of the Filter Housing and
of the Clean Filter Element corresponding to the considered Flow Rate and it must be lower than 50 kPa (0,5 bar) and should never exceed 1/3 of the bypass valve setting.

FILTER HOUSING PRESSURE DROP
(mainly depending on the port size)

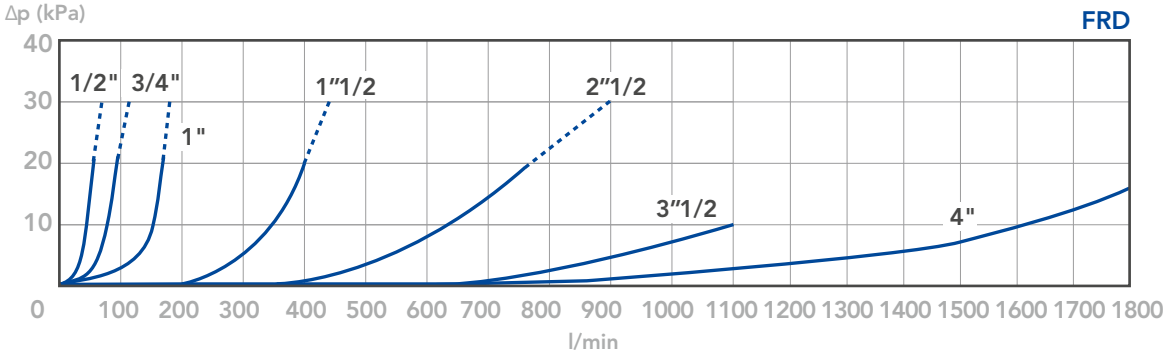

CLEAN FILTER ELEMENT PRESSURE DROP WITH F+, C+ AND M+ MEDIA
(depending both on the internal diameter of the element and on the filter media)

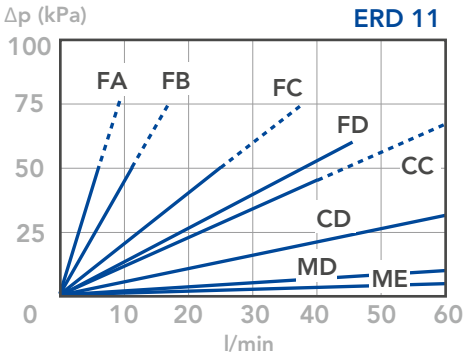

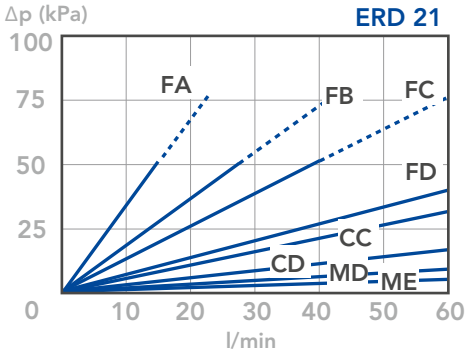

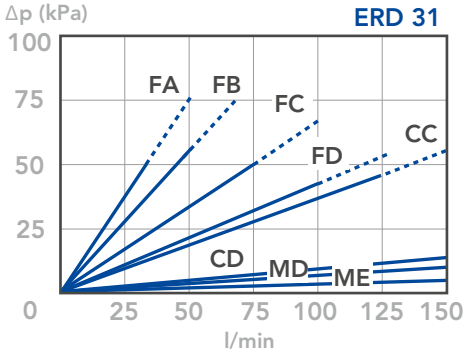

FRD-MRH
RETURN FILTERS

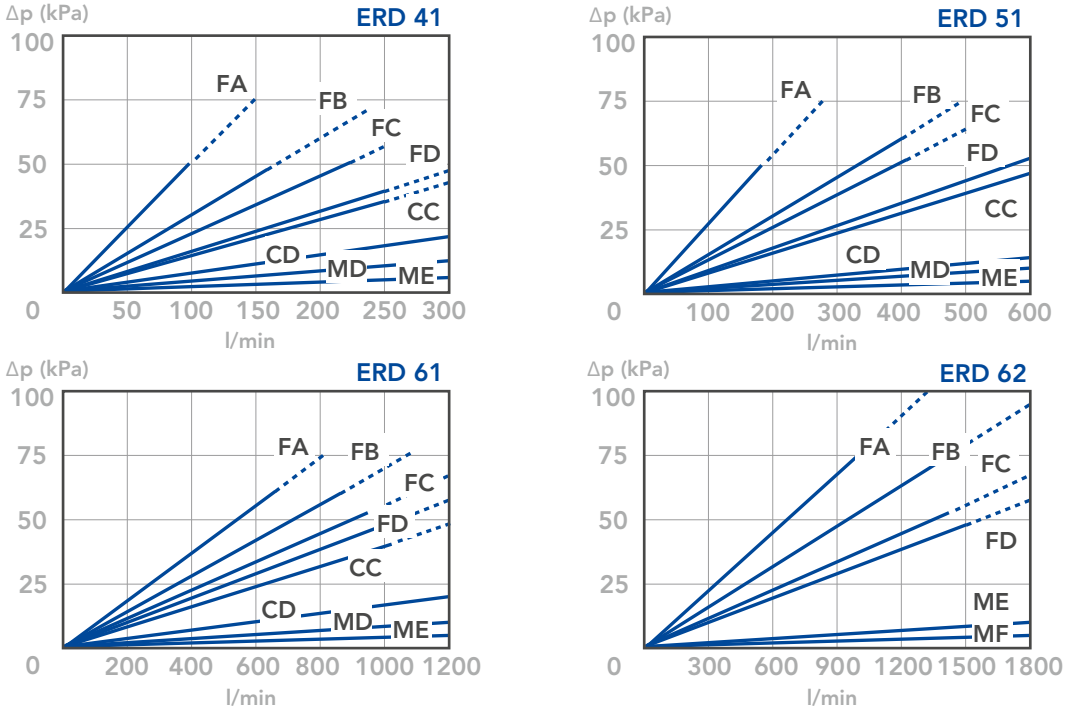

BYPASS VALVE PRESSURE DROP

When selecting the filter size, these curves must be taken into account if it is foreseen that any flow peak is to be absorbed by the bypass valve, it also must be of proper configuration to avoid pressure peaks. The valve pressure drop is directly proportional to fluid specific gravity.

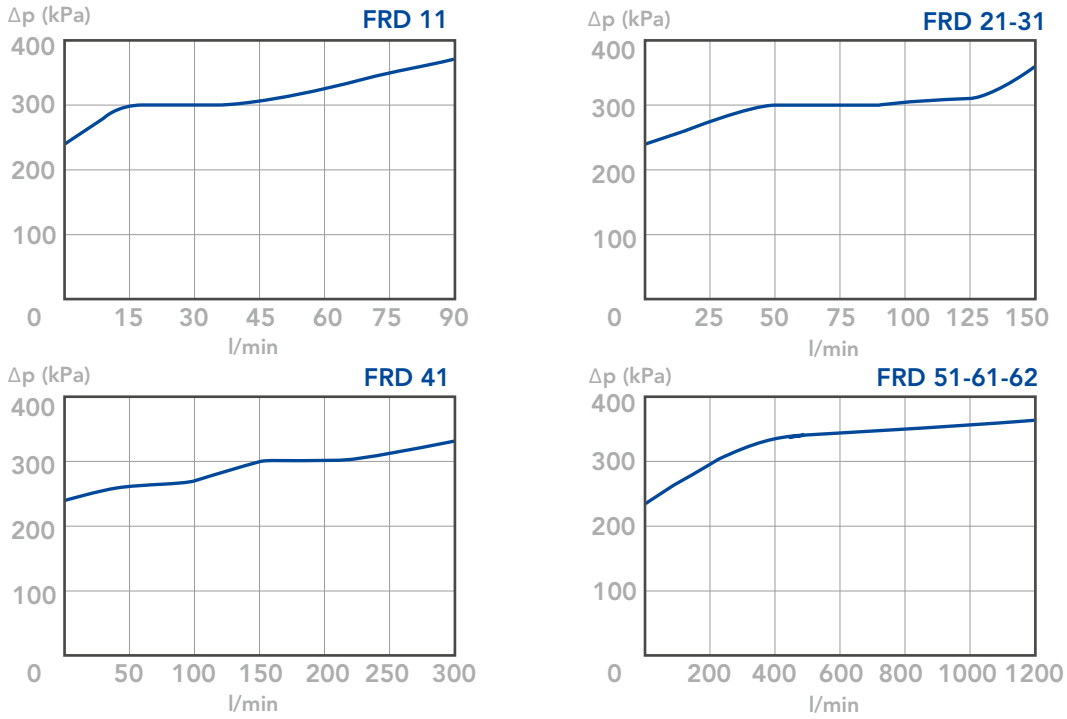

N.B.

All the curves have been obtained with mineral oil having a kinematic viscosity 30 cSt and specific gravity 0,86 Kg/dm3; for fluids with different features, please consider the factors described in the first part of this catalogue. All the curves are obtained from test done at the UFI HYDRAULIC DIVISION Laboratory, according to the specification ISO 3968. In case of discrepancy, please check the contamination level, viscosity and features of the fluid in use.

FRF-RFC
RETURN FILTERS



MATERIALS

Head and cover: Aluminium alloy
Diffusor: Zinc plated steel
Element support:
Polyammide (aluminium alloy for FRF3+ and FRF4+)
Magnetic core: Syntherized magnetic material
Seals: NBR Nitrile
(FKM Fluoroelastomer on request)
Indicator housing: Brass

PRESSURE

Max. working: 1 MPa (10 bar)
Collapse, differential for the filter element (ISO 2941): 1 MPa (10 bar)

BYPASS VALVE

Setting: 170 kPa (1,7 bar) ± 10%

WORKING TEMPERATURE

From -25° to +110° C

COMPATIBILITY (ISO 2943)

Full with fluids: HH-HL-HM-HV-HTG
(according to ISO 6743/4)
For fluids different than the above mentioned,
please contact our Customer Service.



HYDRAULIC DIAGRAM

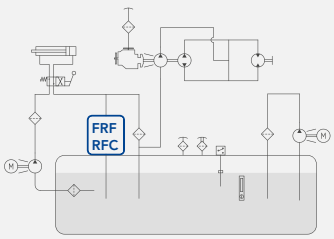

Is this datasheet the latest release? Please check on our website.



FRF
RETURN FILTERS

ORDERING AND OPTION CHART

F	R	F	COMPLETE FILTER FAMILY					FILTER ELEMENT FAMILY	E	R	F
			SIZE & LENGHT	11	12	13	14	SIZE & LENGHT			
			PORT TYPE								
			B = BSP thread	B	B	B	B				
			A = BSP thread, double port (only A08)	A	A	A	A				
			N = NPT thread	N	N	N	N				
			S = SAE thread	S	S	S	S				
			PORT SIZE								
			06 = 3/4"	06	06	06	06				
			08 = 1"	08	08	08	08				
			10 = 1" 1/4	10	10	10	10				
		F	BYPASS VALVE								
			F = 170 kPa (1,7 bar)	F	F	F	F				
			SEALS					SEALS			
			N = NBR Nitrile	N	N	N	N				
			F = FKM Fluoroelastomer	F	F	F	F				
			FILTER MEDIA					FILTER MEDIA			
			FA = fibreglass 5 µm(c) β>1.000	FA	FA	FA	FA				
			FB = fibreglass 7 µm(c) β>1.000	FB	FB	FB	FB				
			FC = fibreglass 12 µm(c) β>1.000	FC	FC	FC	FC				
			FD = fibreglass 21 µm(c) β>1.000	FD	FD	FD	FD				
			CC = impregnated cellulose 10 µm β>2	CC	CC	CC	CC				
			ME = wire mesh 60 µm	ME	ME	ME	ME				
			CLOGGING INDICATOR								
			05 = nr. 2 x 1/8" ports, plugged	05	05	05	05				
			30 = manometer, scale 0 - 600 kPa (0 - 6 bar)	30	30	30	30				
			P4 = SPDT, pressure switch	P4	P4	P4	P4				
			ACCESSORIES								
			W = without accessory	W	W	W	W				
			F = with diffusor	F	F	F	F				
			ACCESSORIES								
			W = without accessory	W	W	W	W				
			M = magnetic core	M	M	M	M				

RFC
RETURN FILTERS



ORDERING AND OPTION CHART

R	F	C	COMPLETE FILTER FAMILY					FILTER ELEMENT FAMILY	C	R	C
			SIZE & LENGHT	110	120	130	140	SIZE & LENGHT			
			FILTER MEDIA					FILTER MEDIA			
			FT = fibreglass 5 µm(c) β>1.000	FT	FT	FT	FT				
			FC = fibreglass 7 µm(c) β>1.000	FC	FC	FC	FC				
			FD = fibreglass 12 µm(c) β>1.000	FD	FD	FD	FD				
			FV = fibreglass 21 µm(c) β>1.000	FV	FV	FV	FV				
			CD = impregnated cellulose 10 µm β>2	CD	CD	CD	CD				
			MS = wire mesh 60 µm	MS	MS	MS	MS				
			SEALS					SEALS			
			1 = NBR Nitrile	1	1	1	1				
			2 = FKM Fluoroelastomer	2	2	2	2				
		F	BYPASS VALVE								
			F = 170 kPa (1,7 bar)	F	F	F	F				
			PORT TYPE								
			B = BSP thread	B	B	B	B				
			N = NPT thread	N	N	N	N				
			S = SAE thread	S	S	S	S				
			PORT SIZE								
			4= 3/4"	4	4	4	4				
			5 = 1"	5	5	5	5				
			6 = 1" 1/4	6	6	6	6				
			CLOGGING INDICATOR								
			05 = nr. 2 x 1/8" ports, plugged	05	05	05	05				
			30 = manometer, scale 0 - 600 kPa (0 - 6 bar)	30	30	30	30				
			P4 = SPDT, pressure switch	P4	P4	P4	P4				
			ACCESSORIES								
			S = without accessory	S	S	S	S				
			D = with diffusor	D	D	D	D				
			ACCESSORIES								
			S = without accessory	S	S	S	S				
			M = magnetic core	M	M	M	M				

FRF
RETURN FILTERS

ORDERING AND OPTION CHART

F	R	F	COMPLETE FILTER FAMILY				FILTER ELEMENT FAMILY	E	R	F
			SIZE & LENGHT	22	23	24	SIZE & LENGHT			
			PORT TYPE							
			B = BSP thread	B	B	B				
			A = BSP thread, double port (only AD1)	A	A	A				
			N = NPT thread	N	N	N				
			S = SAE thread	S	S	S				
			F = SAE flange 3000 psi	F	F	F				
			P = SAE flange 3000 psi, double port	P	P	P				
			PORT SIZE							
			12 = 1” 1/2 (P12= 1”1/2 SAE+ 1” 1/2 BSP)	12	12	12				
			D1 = 1" 1/2 + 1" 1/4 (only AD1)	D1	D1	D1				
		F	BYPASS VALVE							
			F = 170 kPa (1,7 bar)	F	F	F				
			SEALS				SEALS			
			N = NBR Nitrile	N	N	N				
			F = FKM Fluoroelastomer	F	F	F				
			FILTER MEDIA				FILTER MEDIA			
			FA = fibreglass 5 µm(c) β>1.000	FA	FA	FA				
			FB = fibreglass 7 µm(c) β>1.000	FB	FB	FB				
			FC = fibreglass 12 µm(c) β>1.000	FC	FC	FC				
			FD = fibreglass 21 µm(c) β>1.000	FD	FD	FD				
			CC = impregnated cellulose 10 µm β>2	CC	CC	CC				
			ME = wire mesh 60 µm	ME	ME	ME				
			CLOGGING INDICATOR**							
			05 = nr. 2 x 1/8" ports, plugged	05	05	05				
			30 = manometer, scale 0 - 600 kPa (0 - 6 bar)	30	30	30				
			P4 = SPDT, pressure switch	P4	P4	P4				
			03 = port for differential indicator, plugged	03	03	03				
			5B = visual differential 130 kPa (1,3 bar)	5B	5B	5B				
			6B = electrical differential 130 kPa (1,3 bar)	6B	6B	6B				
			7B = indicator 6B with LED	7B	7B	7B				
			T0 = elect. diff. 130 kPa (1,3 bar) with thermostat 30°C	T0	T0	T0				
			ACCESSORIES							
			W = without accessory	W	W	W				
			F = with diffusor	F	F	F				
			ACCESSORIES							
			W = without accessory	W	W	W				
			M = magnetic core	M	M	M				

RFC
RETURN FILTERS



ORDERING AND OPTION CHART

R	F	C	COMPLETE FILTER FAMILY			
			SIZE & LENGHT	220	230	240
			FILTER MEDIA			
			FT = fibreglass 5 µm(c) β>1.000	FT	FT	FT
			FC = fibreglass 7 µm(c) β>1.000	FC	FC	FC
			FD = fibreglass 12 µm(c) β>1.000	FD	FD	FD
			FV = fibreglass 21 µm(c) β>1.000	FV	FV	FV
			CD = impregnated cellulose 10 µm β>2	CD	CD	CD
			MS = wire mesh 60 µm	MS	MS	MS
			SEALS			
			1 = NBR Nitrile	1	1	1
			2 = FKM Fluoroelastomer	2	2	2
	F		BYPASS VALVE			
			F = 170 kPa (1,7 bar)	F	F	F
			PORT TYPE			
			B = BSP thread	B	B	B
			N = NPT thread	N	N	N
			S = SAE thread	S	S	S
			F = SAE flange 3000 psi	F	F	F
			PORT SIZE			
			7 = 1" 1/2	7	7	7
			CLOGGING INDICATOR**			
			05 = nr. 2 x 1/8" ports, plugged	05	05	05
			30 = manometer, scale 0 - 600 kPa (0 - 6 bar)	30	30	30
			P4 = SPDT, pressure switch	P4	P4	P4
			03 = port for differential indicator, plugged	03	03	03
			5B = visual differential 130 kPa (1,3 bar)	5B	5B	5B
			6B = electrical differential 130 kPa (1,3 bar)	6B	6B	6B
			7B = indicator 6B with LED	7B	7B	7B
			T0 = elect. diff. 130 kPa (1,3 bar) with thermostat 30°C	T0	T0	T0
			ACCESSORIES			
			S = without accessory	S	S	S
			D = with diffusor	D	D	D
			ACCESSORIES			
			S = without accessory	S	S	S
			M = magnetic core	M	M	M

FILTER ELEMENT FAMILY	C	R	C
SIZE & LENGHT			
FILTER MEDIA			
SEALS			

NOTES

** When the filter is ordered with FKM seals, the first digit of the indicator code is a letter
(please see Clogging Indicator Chapter for further details)



FRF
RETURN FILTERS

ORDERING AND OPTION CHART

F	R	F	COMPLETE FILTER FAMILY					FILTER ELEMENT FAMILY	E	R	F
			SIZE & LENGHT	31	32	33	34	SIZE & LENGHT			
			PORT TYPE								
			F = SAE flange 3000 psi	F	F	F	F				
			P = SAE flange 3000 psi, double port	P	P	P	P				
			PORT SIZE								
			20 = 2"1/2	20	20	20	20				
			DA = fl. 2"1/2 + 2"	DA	DA	DA	DA				
			D7 = fl. 2"+ 1"1/2	D7	D7	D7	D7				
		F	BYPASS VALVE								
			F = 170 kPa (1,7 bar)	F	F	F	F				
			SEALS					SEALS			
			N = NBR Nitrile	N	N	N	N				
			F = FKM Fluoroelastomer	F	F	F	F				
			FILTER MEDIA					FILTER MEDIA			
			FA = fibreglass 5 µm(c) β>1.000	FA	FA	FA	FA				
			FB = fibreglass 7 µm(c) β>1.000	FB	FB	FB	FB				
			FC = fibreglass 12 µm(c) β>1.000	FC	FC	FC	FC				
			FD = fibreglass 21 µm(c) β>1.000	FD	FD	FD	FD				
			CC = impregnated cellulose 10 µm β>2	CC	CC	CC	CC				
			ME = wire mesh 60 µm	ME	ME	ME	ME				
			CLOGGING INDICATOR**								
			05 = nr. 2 x 1/8" ports, plugged	05	05	05	05				
			30 = manometer, scale 0 - 600 kPa (0 - 6 bar)	30	30	30	30				
			P4 = SPDT, pressure switch	P4	P4	P4	P4				
			03 = port for differential indicator, plugged	03	03	03	03				
			5B = visual differential 130 kPa (1,3 bar)	5B	5B	5B	5B				
			6B = electrical differential 130 kPa (1,3 bar)	6B	6B	6B	6B				
			7B = indicator 6B with LED	7B	7B	7B	7B				
			T0 = elect. diff. 130 kPa (1,3 bar) with thermostat 30°C	T0	T0	T0	T0				
			ACCESSORIES								
			W = without accessory	W	W	W	W				
			F = with diffusor	F	F	F	F				
			ACCESSORIES								
			W = without accessory	W	W	W	W				
			M = magnetic core	M	M	M	M				

RFC
RETURN FILTERS

ORDERING AND OPTION CHART

R	F	C	COMPLETE FILTER FAMILY					FILTER ELEMENT FAMILY	C	R	C
			SIZE & LENGHT	310	320	330	340	SIZE & LENGHT			
			FILTER MEDIA					FILTER MEDIA			
			FT = fibreglass 5 µm(c) β>1.000	FT	FT	FT	FT				
			FC = fibreglass 7 µm(c) β>1.000	FC	FC	FC	FC				
			FD = fibreglass 12 µm(c) β>1.000	FD	FD	FD	FD				
			FV = fibreglass 21 µm(c) β>1.000	FV	FV	FV	FV				
			CD = impregnated cellulose 10 µm β>2	CD	CD	CD	CD				
			MS = wire mesh 60 µm	MS	MS	MS	MS				
			SEALS					SEALS			
			1 = NBR Nitrile	1	1	1	1				
			2 = FKM Fluoroelastomer	2	2	2	2				
		F	BYPASS VALVE								
			F = 170 kPa (1,7 bar)	F	F	F	F				
			PORT TYPE								
			F = SAE flange 3000 psi	F	F	F	F				
			PORT SIZE								
			9 = 2" 1/2	9	9	9	9				
			CLOGGING INDICATOR**								
			05 = nr. 2 x 1/8" ports, plugged	05	05	05	05				
			30 = manometer, scale 0 - 600 kPa (0 - 6 bar)	30	30	30	30				
			P4 = SPDT, pressure switch	P4	P4	P4	P4				
			03 = port for differential indicator, plugged	03	03	03	03				
			5B = visual differential 130 kPa (1,3 bar)	5B	5B	5B	5B				
			6B = electrical differential 130 kPa (1,3 bar)	6B	6B	6B	6B				
			7B = indicator 6B with LED	7B	7B	7B	7B				
			T0 = elect. diff. 130 kPa (1,3 bar) with thermostat 30°C	T0	T0	T0	T0				
			ACCESSORIES								
			S = without accessory	S	S	S	S				
			D = with diffusor	D	D	D	D				
			ACCESSORIES								
			S = without accessory	S	S	S	S				
			M = magnetic core	M	M	M	M				

NOTES

** When the filter is ordered with FKM seals, the first digit of the indicator code is a letter
(please see Clogging Indicator Chapter for further details)



FRF4
RETURN FILTERS

ORDERING AND OPTION CHART

F	R	F	COMPLETE FILTER FAMILY					FILTER ELEMENT FAMILY	E	R	F
			SIZE & LENGHT	41	42	43	44	SIZE & LENGHT			
			PORT TYPE								
			F = SAE flange 3000 psi	F	F	F	F				
			P = SAE flange 3000 psi, double port	P	P	P	P				
			PORT SIZE								
			24 = 3"	24	24	24	24				
			32 = 4"	32	32	32	32				
			D9= 3"+ 4"	D9	D9	D9	D9				
		F	BYPASS VALVE								
			F = 170 kPa (1,7 bar)	F	F	F	F				
			SEALS					SEALS			
			N = NBR Nitrile	N	N	N	N				
			F = FKM Fluoroelastomer	F	F	F	F				
			FILTER MEDIA					FILTER MEDIA			
			FA = fibreglass 5 µm(c) β>1.000	FA	FA	FA	FA				
			FB = fibreglass 7 µm(c) β>1.000	FB	FB	FB	FB				
			FC = fibreglass 12 µm(c) β>1.000	FC	FC	FC	FC				
			FD = fibreglass 21 µm(c) β>1.000	FD	FD	FD	FD				
			CC = impregnated cellulose 10 µm β>2	CC	CC	CC	CC				
			ME = wire mesh 60 µm	ME	ME	ME	ME				
			CLOGGING INDICATOR**								
			05 = nr. 2 x 1/8" ports, plugged	05	05	05	05				
			30 = manometer, scale 0 - 600 kPa (0 - 6 bar)	30	30	30	30				
			P4 = SPDT, pressure switch	P4	P4	P4	P4				
			03 = port for differential indicator, plugged	03	03	03	03				
			5B = visual differential 130 kPa (1,3 bar)	5B	5B	5B	5B				
			6B = electrical differential 130 kPa (1,3 bar)	6B	6B	6B	6B				
			7B = indicator 6B with LED	7B	7B	7B	7B				
			T0 = elect. diff. 130 kPa (1,3 bar) with thermostat 30°C	T0	T0	T0	T0				
			ACCESSORIES								
			W = without accessory	W	W	W	W				
			F = with diffusor	F	F	F	F				
			ACCESSORIES								
			W = without accessory	W	W	W	W				
			M = magnetic core	M	M	M	M				

NOTES

** When the filter is ordered with FKM seals, the first digit of the indicator code is a letter
(please see Clogging Indicator Chapter for further details)



SPARE PARTS ELEMENTS

FILTER HOUSING	FILTER ELEMENT	CLOGGING INDICATOR	ACCESSORIES





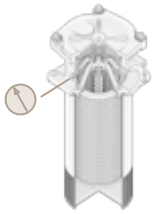





B R F F

E R F

SPARE SEAL KIT

	NBR	FKM
FRF11 RFC110	521.0055.2	521.0056.2
FRF12 RFC120	521.0055.2	521.0056.2
FRF13 RFC130	521.0055.2	521.0056.2
FRF14 RFC140	521.0055.2	521.0056.2
FRF22 RFC220	521.0020.2	521.0057.2
FRF23 RFC230	521.0020.2	521.0057.2
FRF24 RFC240	521.0020.2	521.0057.2
FRF31 RFC310	521.0021.2	521.0058.2
FRF32 RFC320	521.0021.2	521.0058.2
FRF33 RFC330	521.0021.2	521.0058.2
FRF34 RFC340	521.0021.2	521.0058.2
FRF41	521.0095.2	521.0096.2
FRF42	521.0095.2	521.0096.2
FRF43	521.0095.2	521.0096.2
FRF44	521.0095.2	521.0096.2

SPARE SPRING

FRF11 RFC110	008.0282.1
FRF12 RFC120	008.0282.1
FRF13 RFC130	008.0282.1
FRF14 RFC140	008.0282.1
FRF22 RFC220	008.0269.1
FRF23 RFC230	008.0269.1
FRF24 RFC240	008.0269.1
FRF31 RFC310	008.0275.1
FRF32 RFC320	008.0275.1
FRF33 RFC330	008.0275.1
FRF34 RFC340	008.0275.1
FRF41	008.0283.1
FRF42	008.0283.1
FRF43	008.0283.1
FRF44	008.0283.1

FRF1-RFC1
RETURN FILTERS

INSTALLATION DRAWING

FRF 11-12-13-14
SINGLE PORT

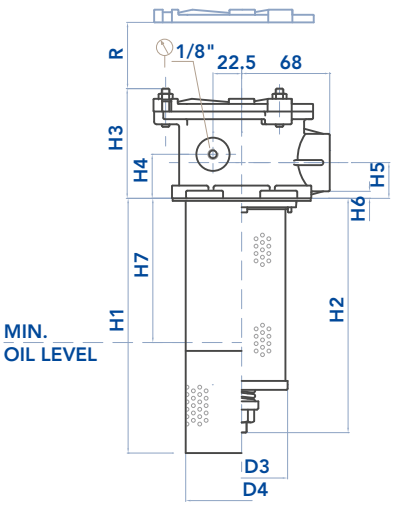

FRF 11-12-13-14
DOUBLE PORT

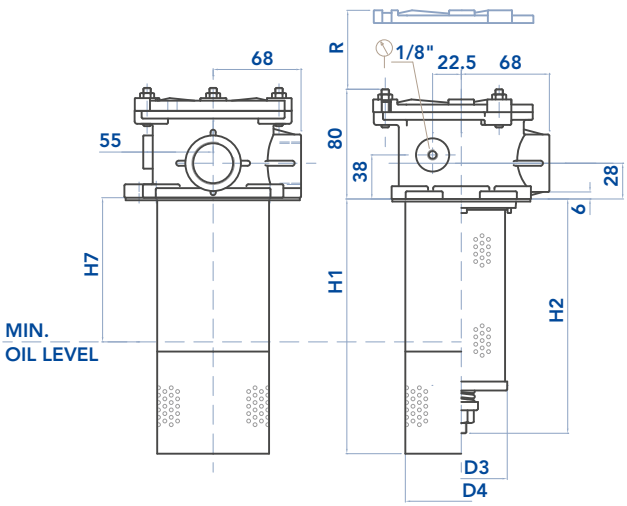

"F" OPTION "W" OPTION

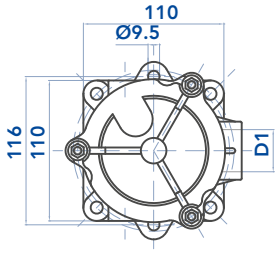

"F" OPTION "W" OPTION

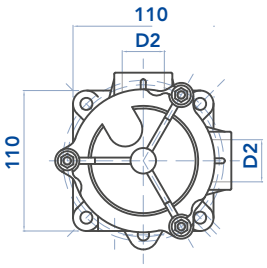

Tank mounting pattern
filter without diffusor

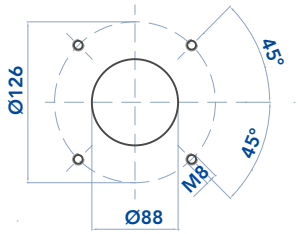

Tank mounting pattern
filter with diffusor

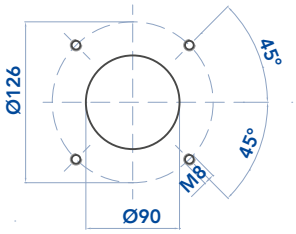

FILTER HOUSING

	D1	D2	D3	D4	D5	H1	H2	H3	H4	H5	H6	H7	R	Kg
FRF11 RFC110	3/4" - 1" - 1" 1/4	1"	72	89	9	198	140	90	38	28÷32	6	118	230	1,20
FRF12 RFC120	3/4" - 1" - 1" 1/4	1"	72	89	9	198	185	90	38	28÷32	6	118	275	1,40
FRF13 RFC130	3/4" - 1" - 1" 1/4	1"	72	89	9	250	235	90	38	28÷32	6	170	325	1,50
FRF14 RFC140	3/4" - 1" - 1" 1/4	1"	72	89	9	350	335	90	38	28÷32	6	270	445	1,70

FRF2-RFC2
RETURN FILTERS

INSTALLATION DRAWING

FRF 22-23-24
SINGLE PORT

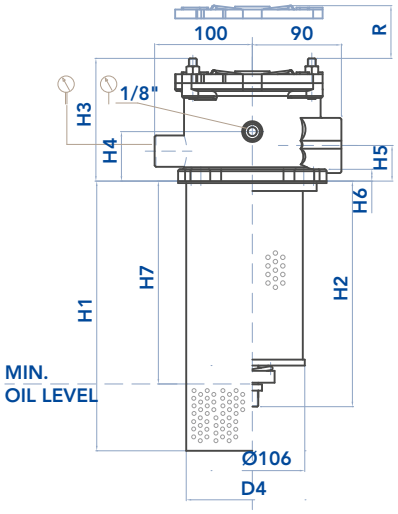

FRF 22-23-24
DOUBLE PORT

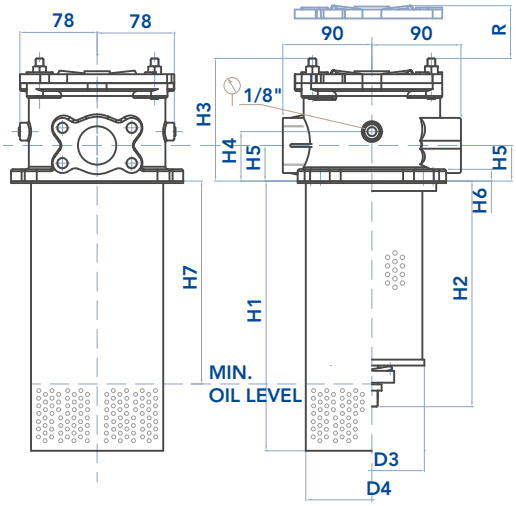

"F" OPTION "W" OPTION

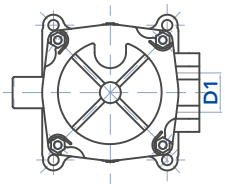

"F" OPTION "W" OPTION

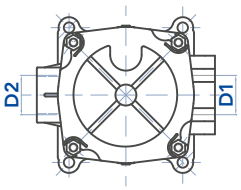

Tank mounting pattern
filter without diffusor

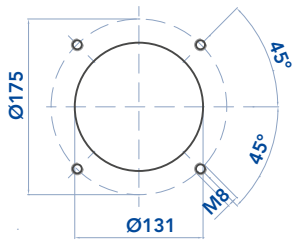

Tank mounting pattern
filter with diffusor

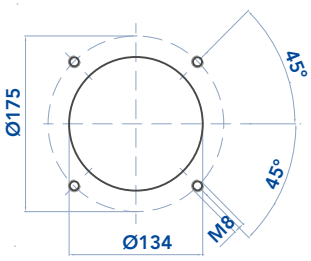

FILTER HOUSING

	D1	D2	D3	D4	H1	H2	H3	H4	H5	H6	H7	R	Kg
FRF22 RFC220	1" 1/2	1"1/4 ÷ 1"1/2	106	133	250	225	129	50	36	12	150	310	4,20
FRF23 RFC230	1" 1/2	1"1/4 ÷ 1"1/2	106	133	320	295	129	50	36	12	220	380	4,70
FRF24 RFC240	1" 1/2	1"1/4 ÷ 1"1/2	106	133	525	500	129	50	36	12	425	580	5,00

FRF3-RFC3

RETURN FILTERS



INSTALLATION DRAWING

FRF31-32-33-34
SINGLE PORT

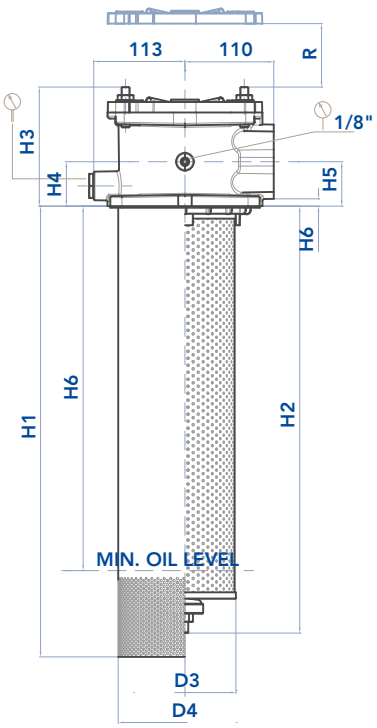

FRF31-32-33-34
DOUBLE PORT

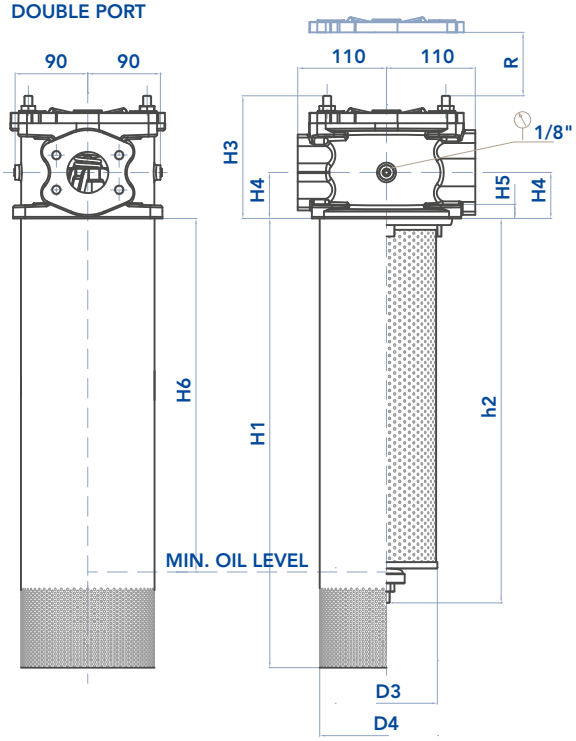

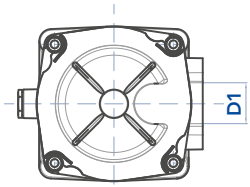

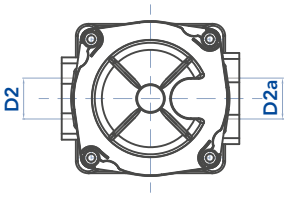

Tank mounting pattern
filter without diffusor

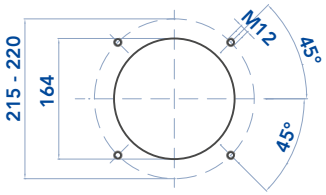

Tank mounting pattern
filter with diffusor

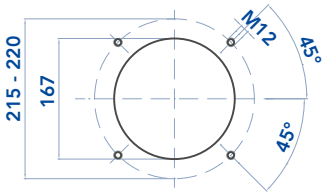

FILTER HOUSING

	D1	D2	D2a	D3	D4	H1	H2	H3	H4	H5	H6	R	Kg
FRF31 RFC310	2"1/2	2" - 2"1/2	1"1/2 - 2"	126	165,5	290	260	155	55	14	190	350	8,00
FRF32 RFC320	2"1/2	2" - 2"1/2	1"1/2 - 2"	126	165,5	370	340	155	55	14	270	430	8,40
FRF33 RFC330	2"1/2	2" - 2"1/2	1"1/2 - 2"	126	165,5	470	440	155	55	14	370	580	8,60
FRF34 RFC340	2"1/2	2" - 2"1/2	1"1/2 - 2"	126	165,5	560	530	155	55	14	460	620	9,10

FRF4
RETURN FILTERS

INSTALLATION DRAWING

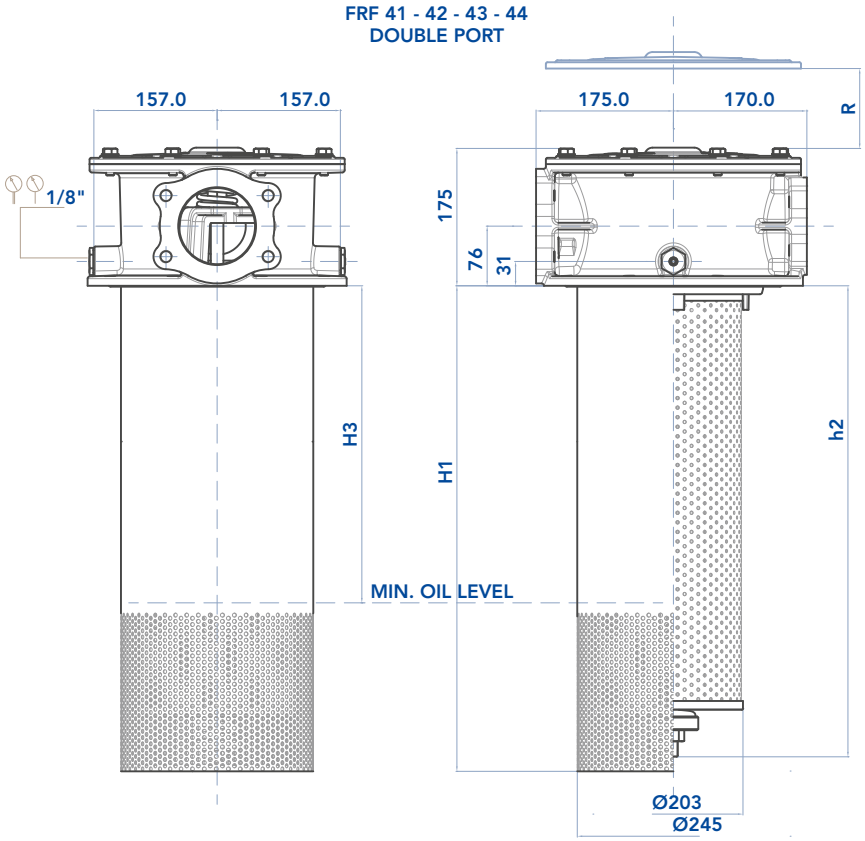

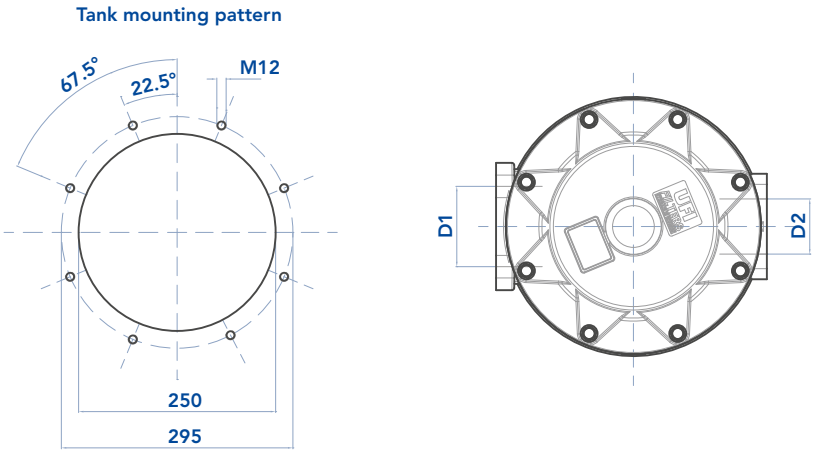

FILTER HOUSING

	D1	D2	H1	H2	H3	R
FRF41	3"	4"	405	396	205	600
FRF42	3"	4"	620	611	420	810
FRF43	3"	4"	900	891	700	1.090
FRF44	3"	4"	1165	1156	965	1.360

FRF-RFC
RETURN FILTERS

MAINTENANCE

The best time to change your filter element is just before it reaches its maximum dirt-holding capacity. For this reason, we recommend to monitor the pressure of the hydraulic oil flowing through the filter with a clogging indicator. When it is time to change the filter element, switch off the system.
Loosen the nuts of the cover, turn clockwise and remove it. Extract the dirty filter element using theupper handle, if necessary remove the spring.

Unscrew the nut at the bottom of the element from the tie rod. Remove the spring holder and the spring. Replace it with an original UFI element, verifying the part number on the filter label or on the catalogue. Assembly in sequence the spring, the spring holder and screw the nut on the tie rod until it stops. Position the cover and tighten the nuts until it stops.
We recommend the stocking of a spare UFI filter element for timely replacement when required.

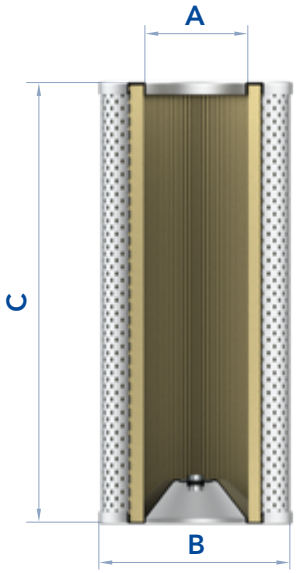

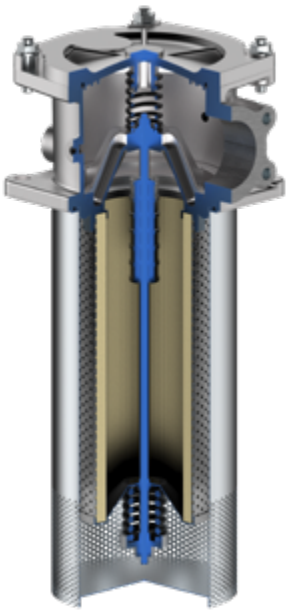

The used filter elements cannot be cleaned and are classified as “Dangerous waste material”. They must be disposed according to local laws by authorized Companies.
Verify that the Company you choose has the expertise and authorization to dispose this type of waste material.

FILTER ELEMENT

FRF1-RFC1

	A	B	C	Kg	AREA (cm²) Media F+	Media C+	Media M+
ERF11 CRC110	45	72	106	0,25	770	1.250	460
ERF12 CRC120	45	72	150	0,35	1.170	1.800	650
ERF13 CRC130	45	72	200	0,45	1.570	2.450	880
ERF14 CRC140	45	72	300	0,60	2.370	3.600	1.320

FRF2-RFC2

	A	B	C	Kg	AREA (cm²) Media F+	Media C+	Media M+
ERF22 CRC220	72	106	190	0,75	3.900	4.600	1.500
ERF23 CRC230	72	106	260	1,00	5.400	6.400	2.050
ERF240 CRC24	72	106	465	1,50	9.700	11.800	3.670

FRF3-RFC3

ERF31 CRC310	92	126	210	1,15	5.500	6.650	2.250
ERF32 CRC320	92	126	290	1,50	7.700	9.200	3.150
ERF33 CRC330	92	126	290	1,90	10.400	12.400	4.250
ERF34 CRC340	92	126	480	2,20	12.800	15.400	5.250

FRF4

ERF41	157	203	330	3,90	17.900	22.100	6.400
ERF42	157	203	545	5,20	30.000	37.000	10.800
ERF43	157	203	825	9,00	45.200	55.500	16.200
ERF44	157	203	1.090	13,00	60.000	74.000	21.800

FRF-RFC
RETURN FILTERS

PRESSURE DROP CURVES (ΔP) 1+ DIAGRAMS

The “Assembly Pressure Drop (Δp)” is obtained by adding the pressure drop values of the Filter Housing and
of the Clean Filter Element corresponding to the considered Flow Rate and it must be lower than 50 kPa (0,5 bar) and should never exceed 1/3 of the bypass valve setting.

FILTER HOUSING PRESSURE DROP
(mainly depending on the port size)

BYPASS VALVE PRESSURE DROP
When selecting the filter size, these curves must be taken into account if it is foreseen that any flow peak is to be absorbed by the bypass valve, it also must be of proper configuration to avoid pressure peaks. The valve pressure drop is directly proportional to fluid specific gravity.

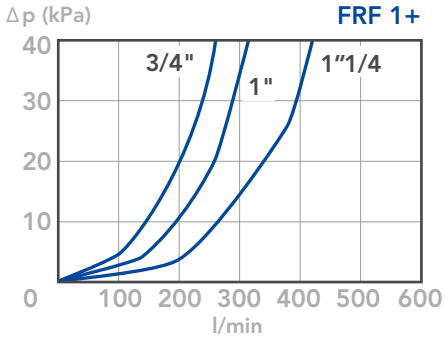

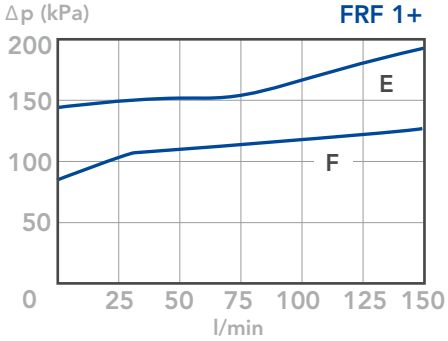

CLEAN FILTER ELEMENT PRESSURE DROP WITH F+, C AND ME MEDIA
(depending both on the internal diameter of the element and on the filter media)

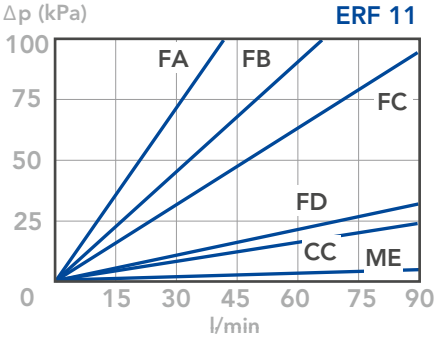

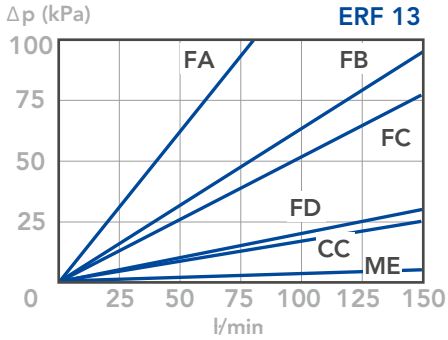

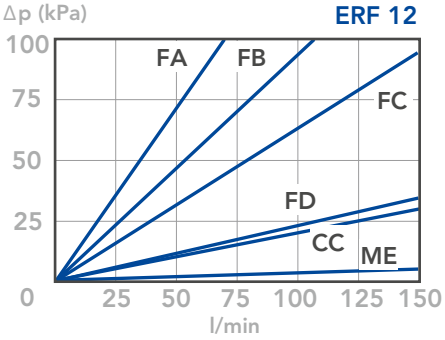

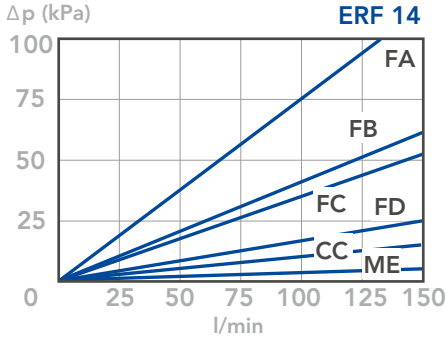

N.B.

All the curves have been obtained with mineral oil having a kinematic viscosity 30 cSt and specific gravity 0,86 Kg/dm3; for fluids with different features, please consider the factors described in the first part of this catalogue. All the curves are obtained from test done at the UFI HYDRAULIC DIVISION Laboratory, according to the specification ISO 3968. In case of discrepancy, please check the contamination level, viscosity and features of the fluid in use.



FRF-RFC
RETURN FILTERS

PRESSURE DROP CURVES (ΔP) 2+ DIAGRAMS

The “Assembly Pressure Drop (Δp)” is obtained by adding the pressure drop values of the Filter Housing and
of the Clean Filter Element corresponding to the considered Flow Rate and it must be lower than 50 kPa (0,5 bar) and should never exceed 1/3 of the bypass valve setting.

FILTER HOUSING PRESSURE DROP
(mainly depending on the port size)

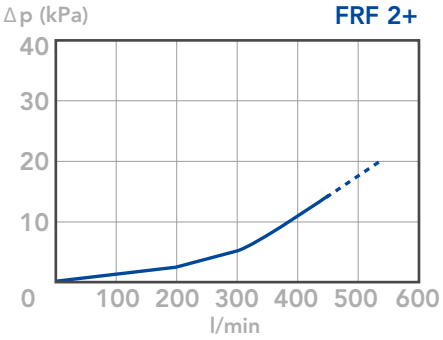

BYPASS VALVE PRESSURE DROP
When selecting the filter size, these curves must be taken into account if it is foreseen that any flow peak is to be absorbed by the bypass valve, it also must be of proper configuration to avoid pressure peaks. The valve pressure drop is directly proportional to fluid specific gravity.

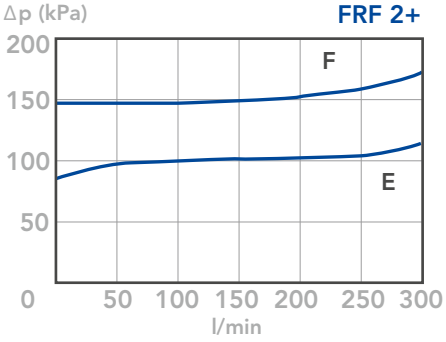

CLEAN FILTER ELEMENT PRESSURE DROP WITH F+, C+ AND ME MEDIA
(depending both on the internal diameter of the element and on the filter media)

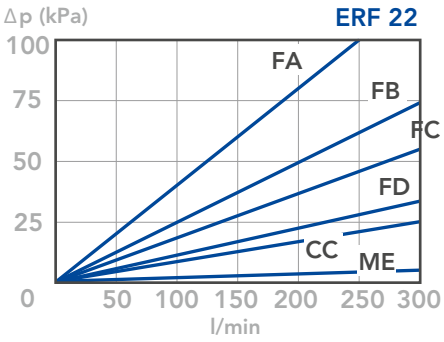

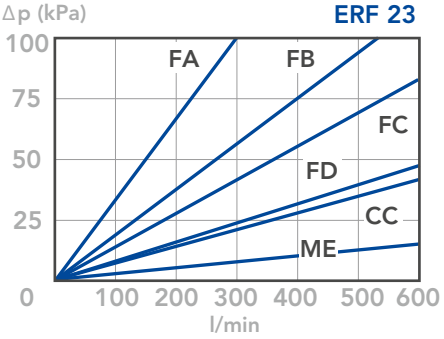

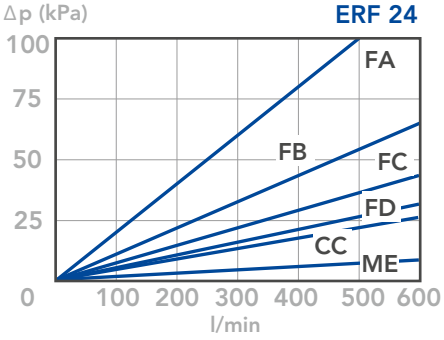

N.B.

All the curves have been obtained with mineral oil having a kinematic viscosity 30 cSt and specific gravity 0,86 Kg/dm3; for fluids with different features, please consider the factors described in the first part of this catalogue. All the curves are obtained from test done at the UFI HYDRAULIC DIVISION Laboratory, according to the specification ISO 3968. In case of discrepancy, please check the contamination level, viscosity and features of the fluid in use.



FRF-RFC
RETURN FILTERS

PRESSURE DROP CURVES (ΔP) 3+ DIAGRAMS

The “Assembly Pressure Drop (Δp)” is obtained by adding the pressure drop values of the Filter Housing and
of the Clean Filter Element corresponding to the considered Flow Rate and it must be lower than 50 kPa (0,5 bar) and should never exceed 1/3 of the bypass valve setting.

FILTER HOUSING PRESSURE DROP
(mainly depending on the port size)

BYPASS VALVE PRESSURE DROP
When selecting the filter size, these curves must be taken into account if it is foreseen that any flow peak is to be absorbed by the bypass valve, it also must be of proper configuration to avoid pressure peaks. The valve pressure drop is directly proportional to fluid specific gravity.

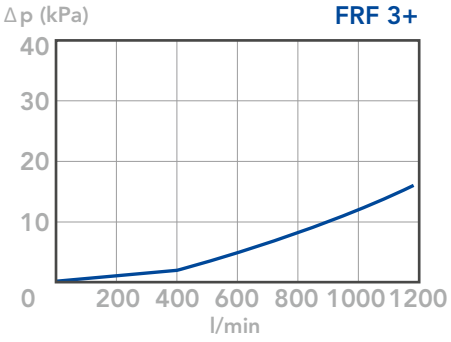

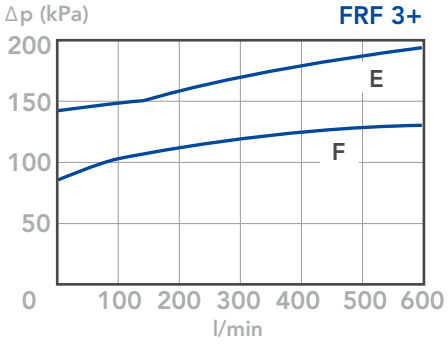

CLEAN FILTER ELEMENT PRESSURE DROP WITH F+, C+ AND ME MEDIA
(depending both on the internal diameter of the element and on the filter media)

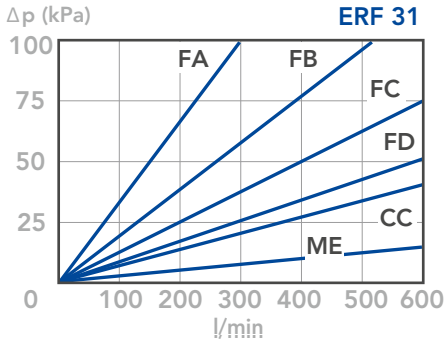

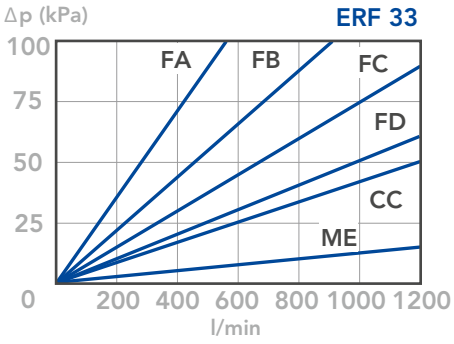

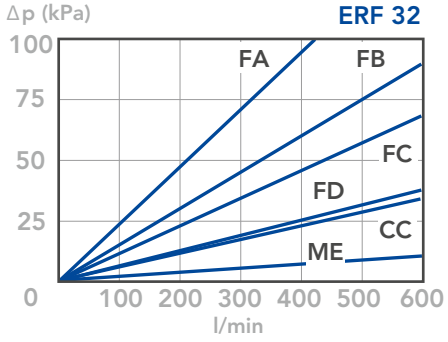

N.B.

All the curves have been obtained with mineral oil having a kinematic viscosity 30 cSt and specific gravity 0,86 Kg/dm3; for fluids with different features, please consider the factors described in the first part of this catalogue. All the curves are obtained from test done at the UFI HYDRAULIC DIVISION Laboratory, according to the specification ISO 3968. In case of discrepancy, please check the contamination level, viscosity and features of the fluid in use.

FRF
RETURN FILTERS

PRESSURE DROP CURVES (ΔP) 4+ DIAGRAMS

The “Assembly Pressure Drop (Δp)” is obtained by adding the pressure drop values of the Filter Housing and
of the Clean Filter Element corresponding to the considered Flow Rate and it must be lower than 50 kPa (0,5 bar) and should never exceed 1/3 of the bypass valve setting.

FILTER HOUSING PRESSURE DROP
(mainly depending on the port size)

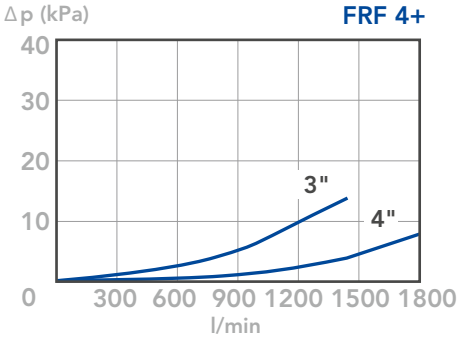

BYPASS VALVE PRESSURE DROP
When selecting the filter size, these curves must be taken into account if it is foreseen that any flow peak is to be absorbed by the bypass valve, it also must be of proper configuration to avoid pressure peaks. The valve pressure drop is directly proportional to fluid specific gravity.

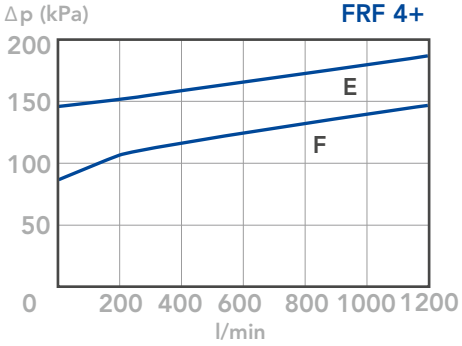

CLEAN FILTER ELEMENT PRESSURE DROP WITH F+, C+ AND ME MEDIA
(depending both on the internal diameter of the element and on the filter media)

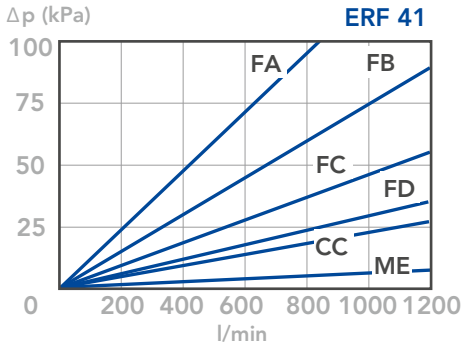

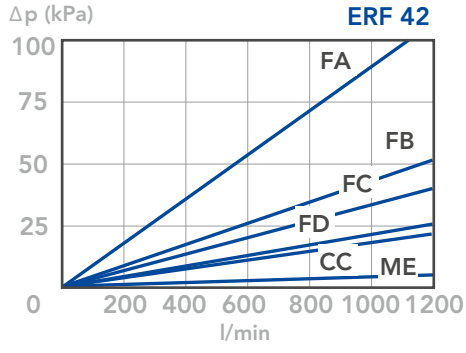

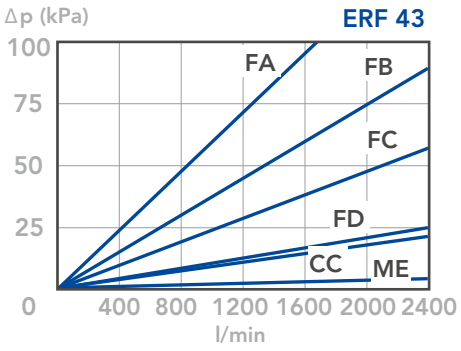

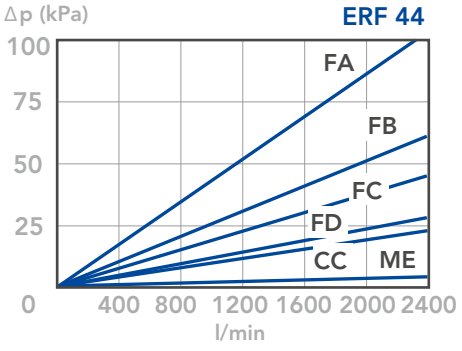

N.B.

All the curves have been obtained with mineral oil having a kinematic viscosity 30 cSt and specific gravity 0,86 Kg/dm3; for fluids with different features, please consider the factors described in the first part of this catalogue. All the curves are obtained from test done at the UFI HYDRAULIC DIVISION Laboratory, according to the specification ISO 3968. In case of discrepancy, please check the contamination level, viscosity and features of the fluid in use.

FRG-RSC
RETURN FILTERS

MATERIALS

Diffusor: Zinc plated steel
Element support: Polyammide
(aluminium alloy for FRG3+ & FRG4+)
Magnetic core: Syntherized magnetic material
Seals: NBR Nitrile
(FKM Fluoroelastomer on request)

PRESSURE

Collapse, differential for the filter element (ISO 2941): 1 MPa (10 bar)

BYPASS VALVE

Setting: 170 kPa (1,7 bar) ± 10%

WORKING TEMPERATURE

From -25° to +110° C

COMPATIBILITY (ISO 2943)

Full with fluids: HH-HL-HM-HV-HTG
(according to ISO 6743/4)
For fluids different than the above mentioned,
please contact our Customer Service.



HYDRAULIC DIAGRAM

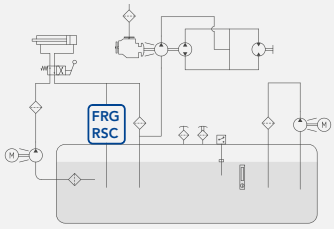

Is this datasheet the latest release? Please check on our website.



FRG
RETURN FILTERS

ORDERING AND OPTION CHART

F	R	G	COMPLETE FILTER FAMILY															FILTER ELEMENT FAMILY	E	R	F
			SIZE & LENGHT	11	12	13	14	22	23	24	31	32	33	34	41	42	43	44	SIZE & LENGHT			
		T	PORT TYPE																			
			T = in the tank	T	T	T	T	T	T	T	T	T	T	T	T	T	T	T				
	0	0	PORT SIZE																			
			00	00	00	00	00	00	00	00	00	00	00	00	00	00	00	00				
		F	BYPASS VALVE																			
			F = 150 kPa (1,5 bar)	F	F	F	F	F	F	F	F	F	F	F	F	F	F	F				
			SEALS																SEALS			
			N = NBR Nitrile	N	N	N	N	N	N	N	N	N	N	N	N	N	N	N				
			F = FKM Fluoroelastomer	F	F	F	F	F	F	F	F	F	F	F	F	F	F	F				
			FILTER MEDIA																FILTER MEDIA			
			FA = fibreglass 5 µm(c) β>1.000	FA	FA	FA	FA	FA	FA	FA	FA	FA	FA	FA	FA	FA	FA	FA				
			FB = fibreglass 7 µm(c) β>1.000	FB	FB	FB	FB	FB	FB	FB	FB	FB	FB	FB	FB	FB	FB	FB				
			FC = fibreglass 12 µm(c) β>1.000	FC	FC	FC	FC	FC	FC	FC	FC	FC	FC	FC	FC	FC	FC	FC				
			FD = fibreglass 21 µm(c) β>1.000	FD	FD	FD	FD	FD	FD	FD	FD	FD	FD	FD	FD	FD	FD	FD				
			CC = impregnated cellulose 10 µm β>2	CC	CC	CC	CC	CC	CC	CC	CC	CC	CC	CC	CC	CC	CC	CC				
			ME = wire mesh 60 µm	ME	ME	ME	ME	ME	ME	ME	ME	ME	ME	ME	ME	ME	ME	ME				
X	X		CLOGGING INDICATOR																			
			XX = not applicable	XX	XX	XX	XX	XX	XX	XX	XX	XX	XX	XX	XX	XX	XX	XX				
			ACCESSORIES																			
			W = without diffusor	W	W	W	W	W	W	W	W	W	W	W	W	W	W	W				
			F = with diffusor	F	F	F	F	F	F	F	F	F	F	F	F	F	F	F				
			ACCESSORIES																			
			W = without magnetic core	W	W	W	W	W	W	W	W	W	W	W	W	W	W	W				
			M = with magnetic core	M	M	M	M	M	M	M	M	M	M	M	M	M	M	M				

SPARE PARTS ELEMENTS

FILTER HOUSING	FILTER ELEMENT	ACCESSORIES	
			
B R G T 0 0 F X X	E R F		



RSC
RETURN FILTERS

ORDERING AND OPTION CHART

R	S	C	COMPLETE FILTER FAMILY															
			SIZE & LENGHT	110	120	130	140	220	230	240	310	320	330	340	410	420	430	440
			FILTER MEDIA															
			FT = fibreglass 5 µm(c) β>1.000	FT	FT	FT	FT	FT	FT	FT	FT	FT	FT	FT	FT	FT	FT	FT
			FC = fibreglass 7 µm(c) β>1.000	FC	FC	FC	FC	FC	FC	FC	FC	FC	FC	FC	FC	FC	FC	FC
			FD = fibreglass 12 µm(c) β>1.000	FD	FD	FD	FD	FD	FD	FD	FD	FD	FD	FD	FD	FD	FD	FD
			FV = fibreglass 21 µm(c) β>1.000	FV	FV	FV	FV	FV	FV	FV	FV	FV	FV	FV	FV	FV	FV	FV
			CD = impregnated cellulose 10 µm β>2	CD	CD	CD	CD	CD	CD	CD	CD	CD	CD	CD	CD	CD	CD	CD
			MS = wire mesh 60 µm	MS	MS	MS	MS	MS	MS	MS	MS	MS	MS	MS	MS	MS	MS	MS
			SEALS															
			1 = NBR Nitrile	1	1	1	1	1	1	1	1	1	1	1	1	1	1	1
			2 = FKM Fluoroelastomer	2	2	2	2	2	2	2	2	2	2	2	2	2	2	2
		F	BYPASS VALVE															
			F = 150 kPa (1,5 bar)	F	F	F	F	F	F	F	F	F	F	F	F	F	F	F
	XXXX		PORT TYPE / PORT SIZE INDICATORS															
			XXXX = not available	xxxx	xxxx	xxxx	xxxx	xxxx	xxxx	xxxx	xxxx	xxxx	xxxx	xxxx	xxxx	xxxx	xxxx	xxxx
			ACCESSORIES															
			S = without diffusor	S	S	S	S	S	S	S	S	S	S	S	S	S	S	S
			D = with diffusor	D	D	D	D	D	D	D	D	D	D	D	D	D	D	D
			ACCESSORIES															
			S = without magnetic core	S	S	S	S	S	S	S	S	S	S	S	S	S	S	S
			M = with magnetic core	M	M	M	M	M	M	M	M	M	M	M	M	M	M	M

FILTER ELEMENT FAMILY	C	R	C
SIZE & LENGHT			
FILTER MEDIA			
SEALS			

SPARE SEAL KIT

	NBR	FKM
FRG11 - RSC110	521.0063.2	521.0067.2
FRG12 - RSC120	521.0063.2	521.0067.2
FRG13 - RSC130	521.0063.2	521.0067.2
FRG14 - RSC140	521.0063.2	521.0067.2
FRG22 - RSC220	521.0064.2	521.0068.2
FRG23 - RSC230	521.0064.2	521.0068.2
FRG24 - RSC240	521.0064.2	521.0068.2
FRG31 - RSC310	521.0065.2	521.0069.2
FRG32 - RSC320	521.0065.2	521.0069.2
FRG33 - RSC330	521.0065.2	521.0069.2
FRG34 - RSC340	521.0065.2	521.0069.2
FRG41 - RSC410	521.0066.2	521.0070.2
FRG42 - RSC420	521.0066.2	521.0070.2
FRG43 - RSC430	521.0066.2	521.0070.2
FRG44 - RSC440	521.0066.2	521.0070.2

SPARE SPRING

FRG11 - RSC110	008.0282.1
FRG12 - RSC120	008.0282.1
FRG13 - RSC130	008.0282.1
FRG14 - RSC140	008.0282.1
FRG22 - RSC220	008.0269.1
FRG23 - RSC230	008.0269.1
FRG24 - RSC240	008.0269.1
FRG31 - RSC310	008.0275.1
FRG32 - RSC320	008.0275.1
FRG33 - RSC330	008.0275.1
FRG34 - RSC340	008.0275.1
FRG41 - RSC410	008.0283.1
FRG42 - RSC420	008.0283.1
FRG43 - RSC430	008.0283.1
FRG44 - RSC440	008.0283.1

FRG-RSC
RETURN FILTERS

INSTALLATION DRAWING

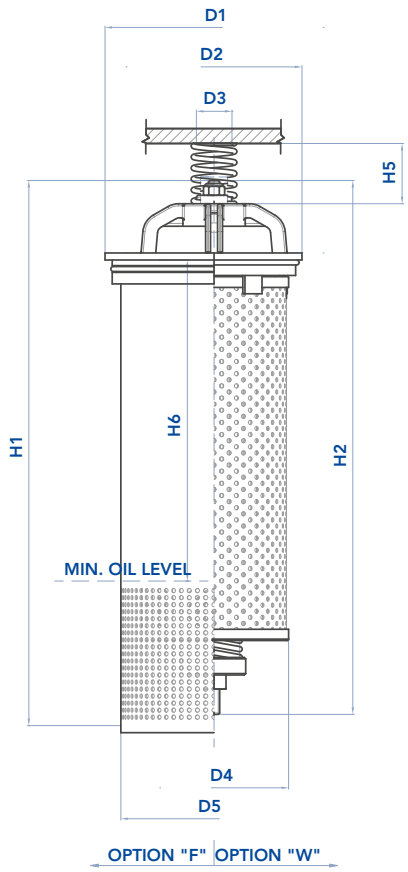

Tank mounting pattern
filter without diffusor

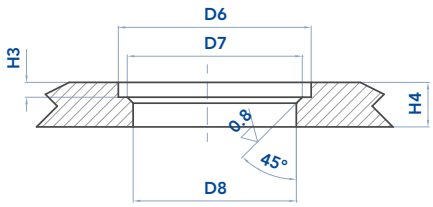

Tank mounting pattern
filter with diffusor

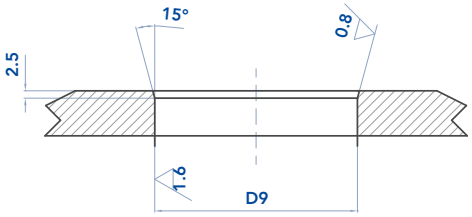

FILTER HOUSING

	D1	D2	D3	D4	D5	D6	D7	D8	D9	H1	H2	H3	H4	H5	H6	KG opz F	KG opz W
FRG11 - RSC110	120	87	20	72	89	88	82,5	76	110	245	180	4	12	45	118	1,25	0,70
RG12 - RSC120	120	87	20	72	89	88	82,5	76	110	245	224	4	12	45	118	1,45	0,90
FRG13 - RSC130	120	87	20	72	89	88	82,5	76	110	295	274	4	12	45	170	1,65	1,00
FRG14 - RSC140	120	87	20	72	89	88	82,5	76	110	395	374	4	12	45	270	2,10	1,30
FRG22 - RSC220	155	125,5	25	106	132	126	123,5	117	145	312	305	5	15	78	150	2,75	1,65
FRG23 - RSC230	155	125,5	25	106	132	126	123,5	117	145	382	375	5	15	78	220	3,20	1,90
FRG24 - RSC240	155	125,5	25	106	132	126	123,5	117	145	587	580	5	15	78	425	4,40	2,50
FRG31 - RSC310	185	150	25	126	165	151	149	139	178	365	351	5	18	100	190	3,85	2,25
FRG32 - RSC320	185	150	25	126	165	151	149	139	178	455	431	5	18	100	270	4,70	2,80
FRG33 - RSC330	185	150	25	126	165	151	149	139	178	555	531	5	18	100	370	5,60	3,20
FRG34 - RSC340	185	150	25	126	165	151	149	139	178	645	619	5	18	100	460	6,20	3,50
FRG41 - RSC410	260	230	40	203	235	231	227	217	250,5	530,5	515	6	20	140	205	10,20	7,20
FRG42 - RSC420	260	230	40	203	235	231	227	217	250,5	745,5	730	6	20	140	420	14,00	9,50
FRG43 - RSC430	260	230	40	203	235	231	227	217	250,5	1025,5	1010	6	20	140	700	20,00	14,00
FRG44 - RSC440	260	230	40	203	235	231	227	217	250,5	1290,5	1275	6	20	140	965	26,00	19,00

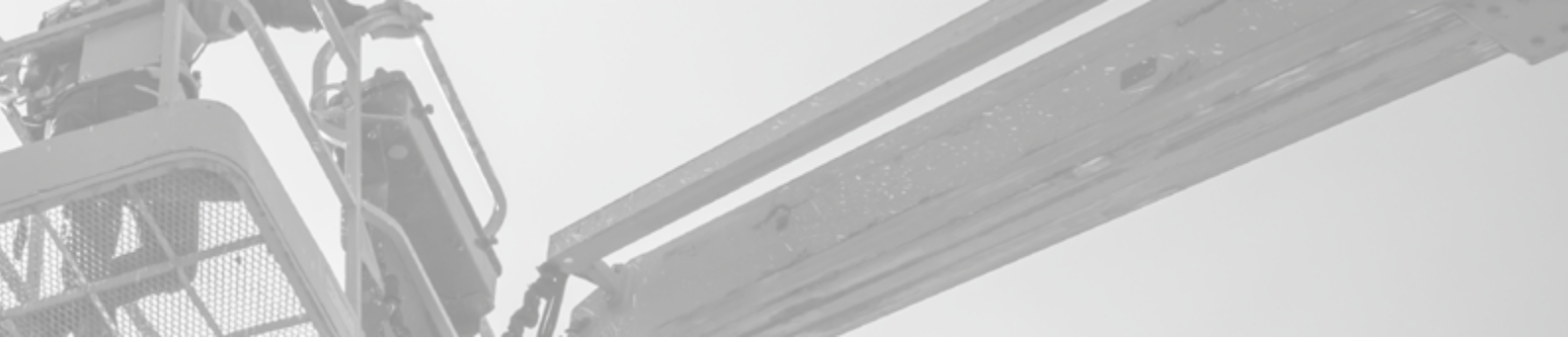

MAINTENANCE

The best time to change your filter element is just before it reaches its maximum dirt-holding capacity. For this reason, we recommend to monitor the pressure of the hydraulic oil flowing through the filter with a clogging indicator. When it is time to change the filter element, switch off the system. Remove the complete filter by upper handle and if necessary remove the spring. Unscrew the nut from tie-rod and remove the spring holder and the spring. Remove dirty filter element. If the magnetic core is present on the tie rod, clean it carefully. Replace it with an original UFI element, verifying the part number on the filter label or on the catalogue. Lubricate the new element O-Ring gasket with oil. Insert the clean element on tie-rod handling with care and cleanliness. Assembly the spring, spring holder and tighten the nut on the tie-rod until it stops, with a tightening torque of 15 Nm +3/0. Insert the complete filter into the seat.
We recommend the stocking of a spare UFI filter element for timely replacement when required.

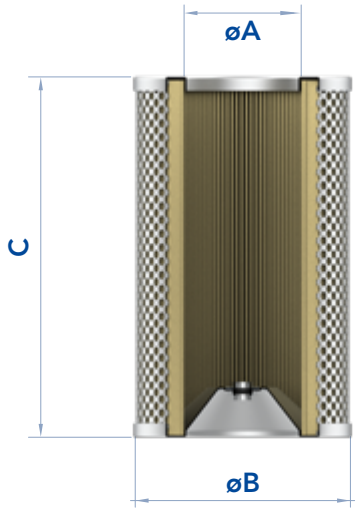

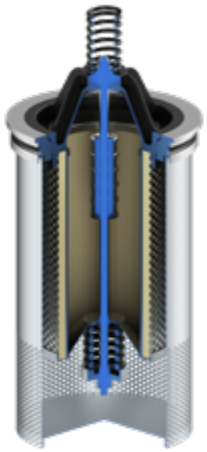

FILTER ELEMENT

	A	B	C	Kg	AREA (cm²) Media F+	AREA (cm²) MediaH+	AREA (cm²) Media C+
ERF11 - CRC110	45	72	106	0,25	770	1.250	460
ERF12 - CRC120	45	72	150	0,35	1.170	1.800	650
ERF13 - CRC130	45	72	200	0,45	1.570	2.450	880
ERF14 - CRC140	45	72	300	0,60	2.370	3.600	1.320
ERF22 - CRC220	72	106	190	0,75	3.900	4.600	1.500
ERF23 - CRC230	72	106	260	1,00	5.400	6.400	2.050
ERF24 - CRC240	72	106	465	1,50	9.700	11.800	3.670
ERF31 - CRC310	92	126	210	1,15	5.500	6.650	2.250
ERF32 - CRC320	92	126	290	1,50	7.700	9.200	3.150
ERF33 - CRC330	92	126	390	1,90	10.400	12.400	4.250
ERF34 - CRC340	92	126	480	2,20	12.800	15.400	5.250
ERF41 - CRC410	157	203	330	3,90	17.900	22.100	6.400
ERF42 - CRC420	157	203	545	5,20	30.000	37.000	10.800
ERF43 - CRC430	157	203	825	9,00	45.200	55.500	16.200
ERF44 - CRC440	157	203	1.090	13,00	60.000	74.000	21.800

The used filter elements cannot be cleaned and are classified as “Dangerous waste material”. They must be disposed according to local laws by authorized Companies.
Verify that the Company you choose has the expertise and authorization to dispose this type of waste material.

FRG-RSC
RETURN FILTERS

PRESSURE DROP CURVES (ΔP)

The “Assembly Pressure Drop (Δp)” is obtained by adding the pressure drop values of the Filter Housing and
of the Clean Filter Element corresponding to the considered Flow Rate and it must be lower than 50 kPa (0,5 bar) and should never exceed 1/3 of the bypass valve setting.

CLEAN FILTER ELEMENT PRESSURE DROP WITH F+, C+ AND ME MEDIA (depending both on the internal diameter of the element and on the filter media)

ERF 11

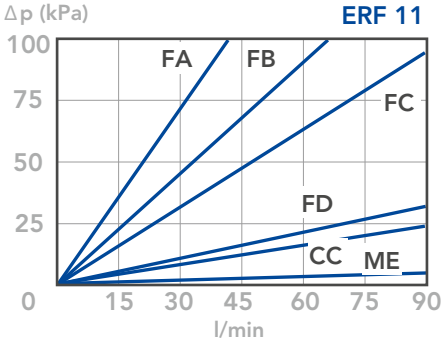

ERF 12

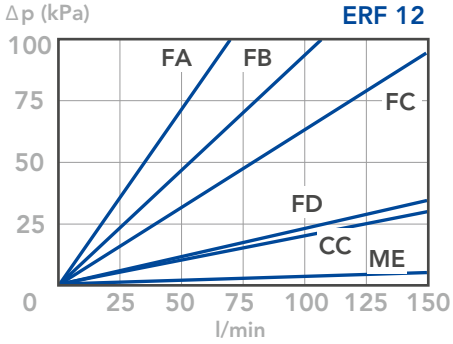

ERF 13

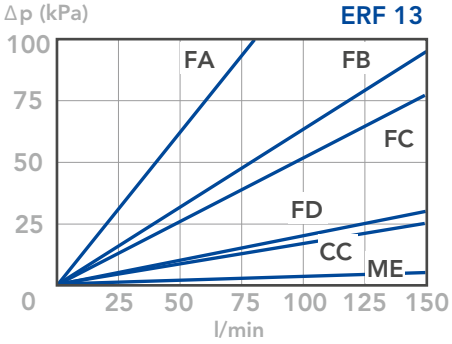

ERF 14

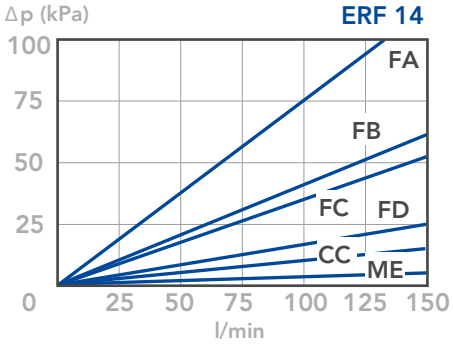

ERF 22

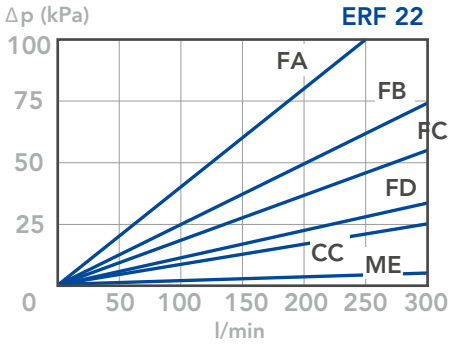

ERF 23

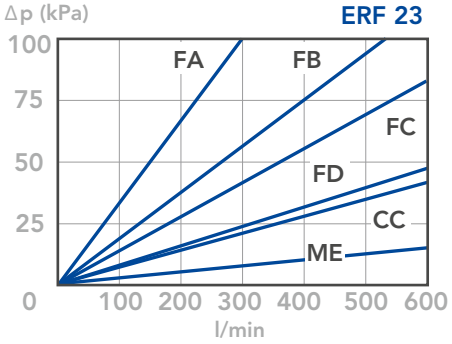

ERF 24

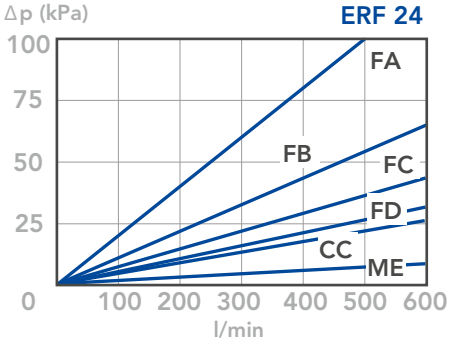

ERF 31

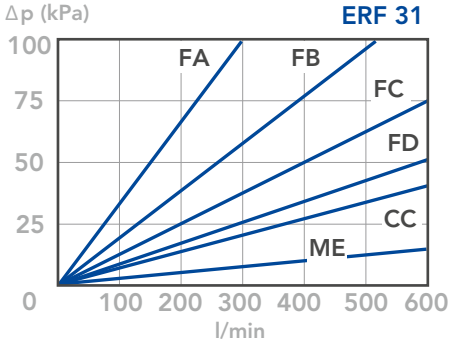

ERF 32

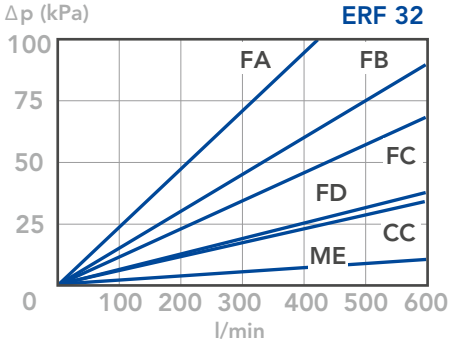



CLEAN FILTER ELEMENT PRESSURE DROP WITH F+, C+ AND ME MEDIA
(depending both on the internal diameter of the element and on the filter media)

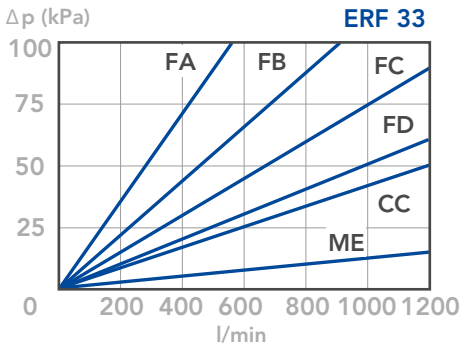

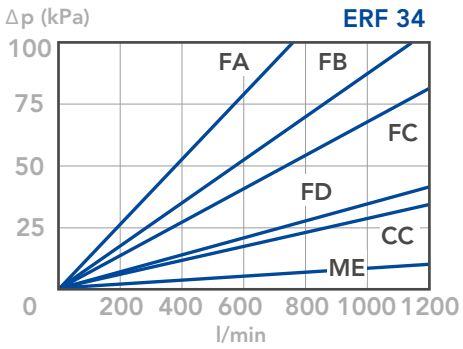

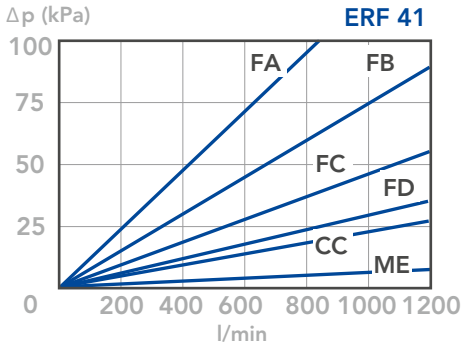

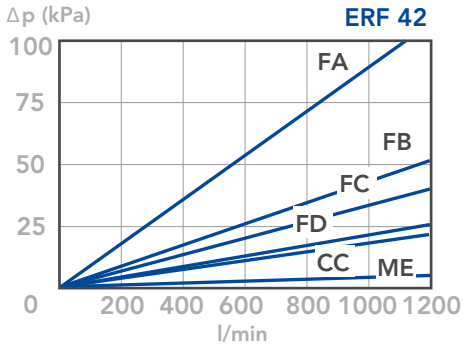

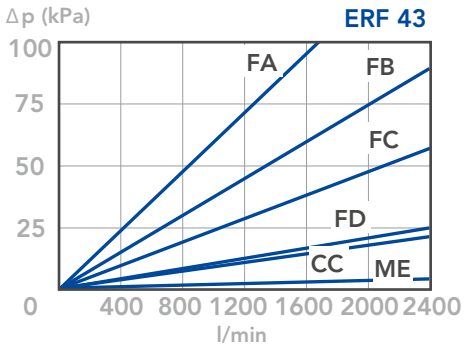

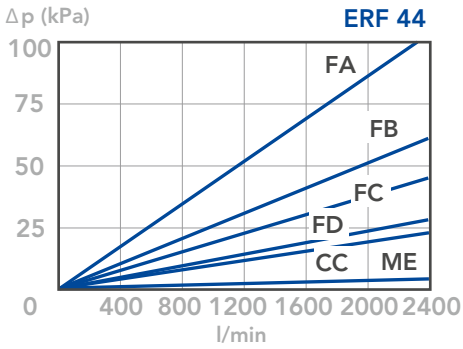

N.B.

All the curves have been obtained with mineral oil having a kinematic viscosity 30 cSt and specific gravity 0,86 Kg/dm3; for fluids with different features, please consider the factors described in the first part of this catalogue. All the curves are obtained from test done at the UFI HYDRAULIC DIVISION Laboratory, according to the specification ISO 3968. In case of discrepancy, please check the contamination level, viscosity and features of the fluid in use.



FRG-RSC
RETURN FILTERS

BYPASS VALVE PRESSURE DROP

When selecting the filter size, these curves must be taken into account if it is foreseen that any flow peak is to be absorbed by the bypass valve, it also must be of proper configuration to avoid pressure peaks. The valve pressure drop is directly proportional to fluid specific gravity.

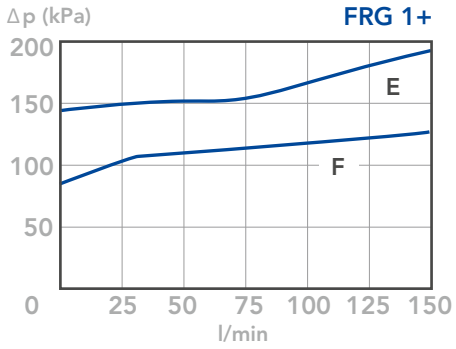

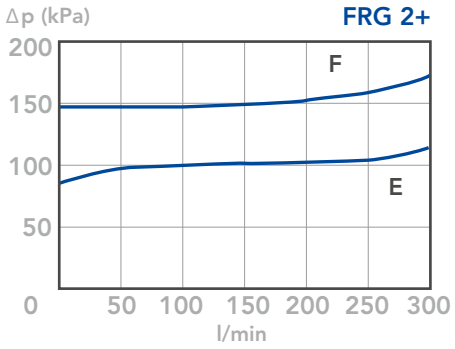

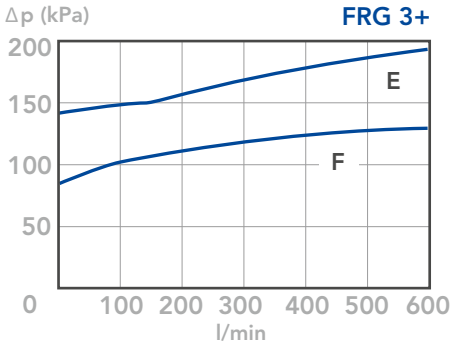

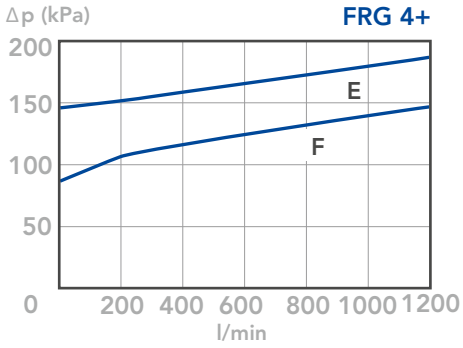

N.B.

All the curves have been obtained with mineral oil having a kinematic viscosity 30 cSt and specific gravity 0,86 Kg/dm3; for fluids with different features, please consider the factors described in the first part of this catalogue. All the curves are obtained from test done at the UFI HYDRAULIC DIVISION Laboratory, according to the specification ISO 3968. In case of discrepancy, please check the contamination level, viscosity and features of the fluid in use.

FRH
RETURN FILTERS



MATERIALS

Head and cover: Aluminium alloy
Bowl: Polyammide
Bypass valve: Polyammide
Seals: NBR Nitrile
FKM Fluoroelastomer on request
Indicator housing: Brass

PRESSURE

Max working: 300 kPa (3 bar)
Collapse, differential for the filter element (ISO 2941):
300 kPa (3 bar)

BYPASS VALVE

Setting: 170 kPa (1,7 bar) ± 10%

WORKING TEMPERATURE

From -25° to +110° C

COMPATIBILITY (ISO 2943)

Full with fluids: HH-HL-HM-HV-HTG
(according to ISO 6743/4)
For fluids different than the above mentioned,
please contact our Customer Service.



HYDRAULIC DIAGRAM

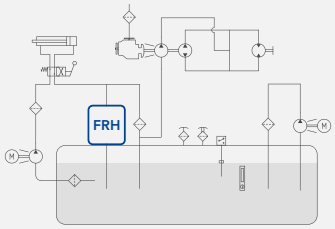

Is this datasheet the latest release? Please check on our website.

FRH
RETURN FILTERS

ORDERING AND OPTION CHART

F	R	H	COMPLETE FILTER FAMILY				FILTER ELEMENT FAMILY	E	R	A
			SIZE & LENGHT	31	32	33	SIZE & LENGHT			
			PORT TYPE							
			B = BSP thread	B	B	B				
			A = BSP thread (double port A08 only)	A	A	A				
			N = NPT thread	N	N	N				
			S = SAE thread	S	S	S				
			PORT SIZE							
			06 = 3/4"	06	06	06				
			08 = 1"	08	08	08				
			10 = 1"1/4	10	10	10				
		B	BYPASS VALVE							
			B = 170 kPa (1,7 bar)	B	B	B				
			SEALS				SEALS			
			N = NBR Nitrile	N	N	N				
			F = FKM Fluoroelastomer	F	F	F				
			FILTER MEDIA				FILTER MEDIA			
			FA = fibreglass 5 µm(c) β>1.000	FA	FA	FA				
			FB = fibreglass 7 µm(c) β>1.000	FB	FB	FB				
			FC = fibreglass 12 µm(c) β>1.000	FC	FC	FC				
			FD = fibreglass 21 µm(c) β>1.000	FD	FD	FD				
			CC = impregnated cellulose 10 µm β>2	CC	CC	CC				
			CD = impregnated cellulose 25 µm β>2	CD	CD	CD				
			ME = wire mesh 60 µm	ME	ME	ME				
			CLOGGING INDICATOR							
			05 = nr. 2 x 1/8"ports, plugged	05	05	05				
			30 = pressure gauge, rear connection	30	30	30				
			P1 = SPDT, pressure switch	P1	P1	P1				
			ACCESSORIES							
			W = without	W	W	W				
			P = with filling plug	P	P	P				
		X	ACCESSORIES							
			X = no other accessory available	X	X	X				

SPARE PARTS ELEMENTS

FILTER HOUSING	FILTER ELEMENT	CLOGGING INDICATOR	ACCESSORY
			
BRH B X	ERA		



FRH
RETURN FILTERS

ORDERING AND OPTION CHART

F	R	H	COMPLETE FILTER FAMILY			FILTER ELEMENT FAMILY	E	R	A
			SIZE & LENGHT	41	42	SIZE & LENGHT			
		P	PORT TYPE						
			P = SAE flange 3000 psi, double port	P	P				
	1	2	PORT SIZE						
			12 = 1"1/2	12	12				
		B	BYPASS VALVE						
			B = 170 kPa (1,7 bar)	B	B				
			SEALS			SEALS			
			N = NBR Nitrile	N	N				
			F = FKM Fluoroelastomer	F	F				
			FILTER MEDIA			FILTER MEDIA			
			FA = fibreglass 5 µm(c) β>1.000	FA	FA				
			FB = fibreglass 7 µm(c) β>1.000	FB	FB				
			FC = fibreglass 12 µm(c) β>1.000	FC	FC				
			FD = fibreglass 21 µm(c) β>1.000	FD	FD				
			CC = impregnated cellulose 10 µm β>2	CC	CC				
			CD = impregnated cellulose 25 µm β>2	CD	CD				
			ME = wire mesh 60 µm	ME	ME				
			CLOGGING INDICATOR						
			05 = nr. 2 x 1/8"ports, plugged	05	05				
			30 = pressure gauge, rear connection	30	30				
			P1 = SPDT, pressure switch	P1	P1				
			ACCESSORIES						
			W = without	W	W				
			P = with filling plug	P	P				
		X	ACCESSORIES						
			X = no other accessory available	X	X				

SPARE SEAL KIT

	NBR	FKM
FRH31	521.0022.2	521.0059.2
FRH32	521.0022.2	521.0059.2
FRH33	521.0022.2	521.0059.2
FRH41	521.0060.2	521.0061.2
FRH42	521.0060.2	521.0061.2

SPARE SPRING

FRH31	008.0267.1
FRH32	008.0267.1
FRH33	008.0267.1
FRH41	008.0151.1
FRH42	008.0151.1

FRH
RETURN FILTERS

INSTALLATION DRAWING

FRH 31 - 32 - 33
SINGLE PORT

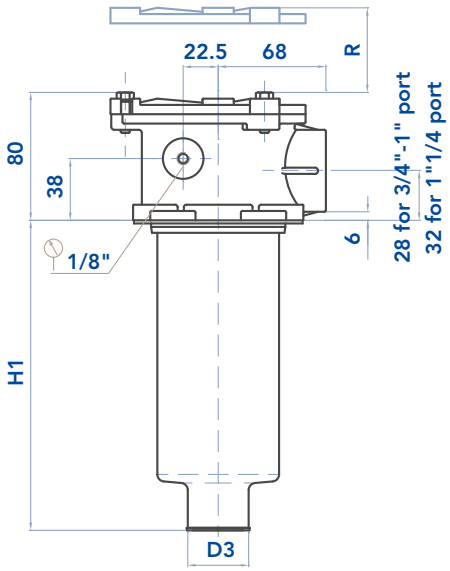

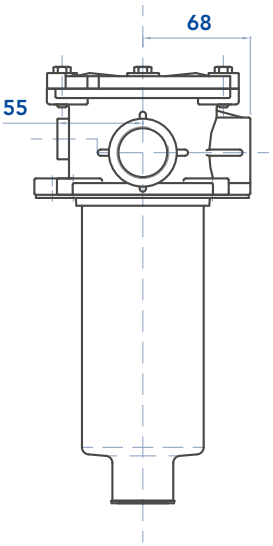

FRH 31 - 32 - 33
DOUBLE PORT

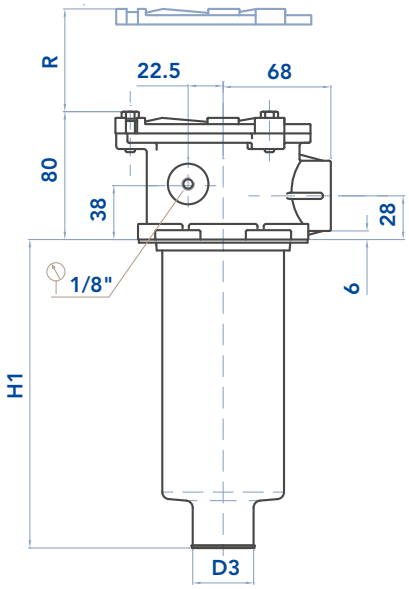

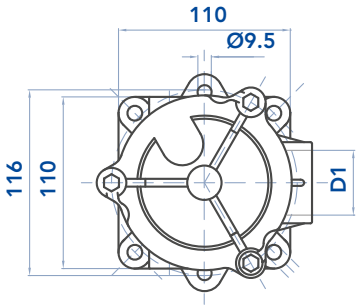

Tank mounting pattern

OPTION "F" OPTION "W"

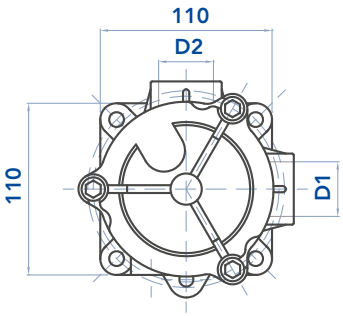

Tank mounting pattern

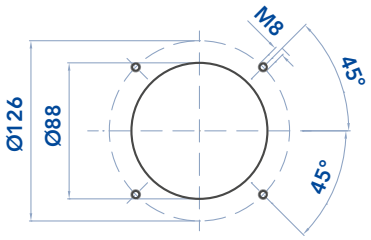

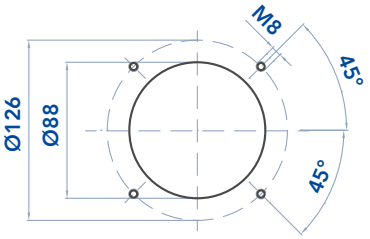

FILTER HOUSING

	D1	D2	D3	H1	R	Kg
FRH31	3/4" - 1" - 1" /4	1"	27	106	165	0,95
FRH32	3/4" - 1" - 1" /4	1"	27	152	205	1,10
FRH33	3/4" - 1" - 1" /4	1"	40	235	285	1,25



INSTALLATION DRAWING

FRH 41 - 42

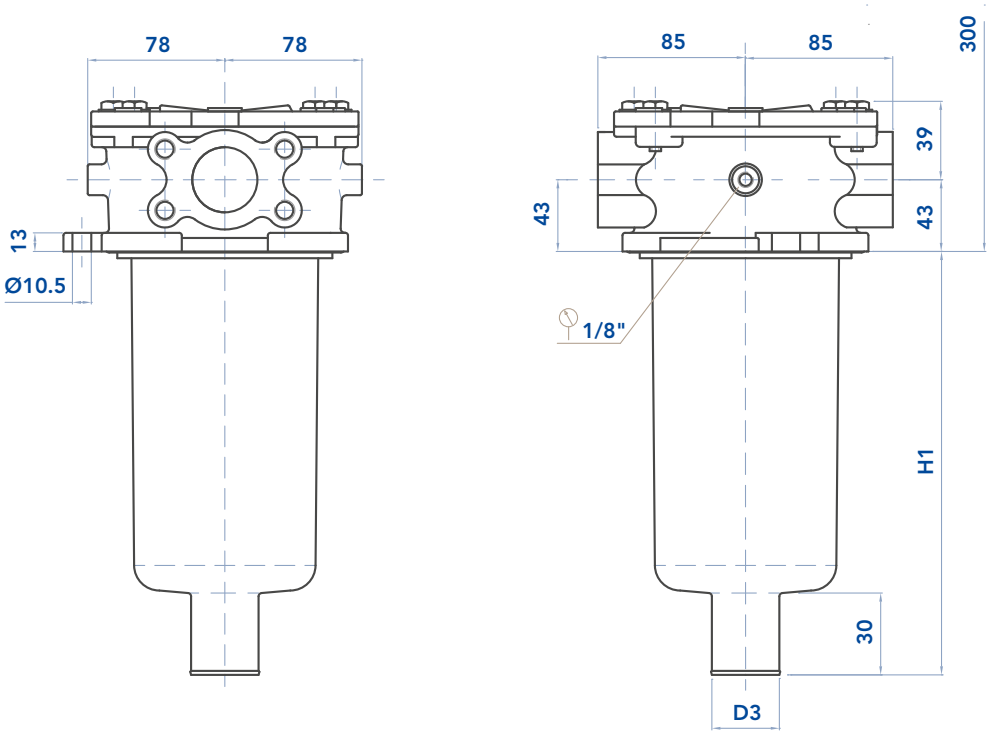

Tank mounting pattern

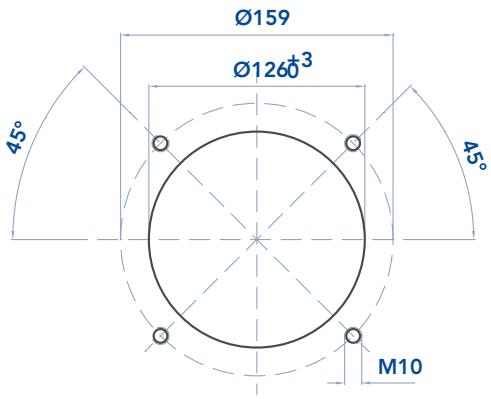

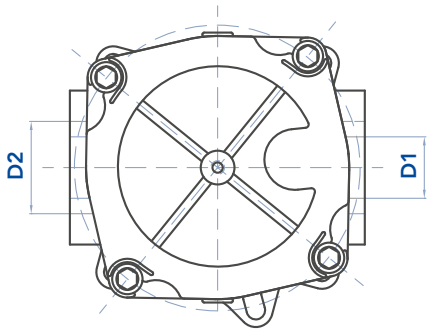

FILTER HOUSING

	D1	D2	D3	H1	R	Kg
FRH41	1"1/2	1"1/2	40	248	289	2,40
FRH42	1"1/2	1"1/2	40	265	306	2,60

FRH
RETURN FILTERS



MAINTENANCE

The best time to change your filter element is just before it reaches its maximum dirt-holding capacity. For this reason, we recommend to monitor the pressure of the hydraulic oil flowing through the filter with a clogging indicator. When it is time to change the filter element, switch off the system before opening the filter housing. Unscrew the cover of the filter head and remove the spring (to be hold) and the dirty filter element. Replace it with an original UFI element, verifying the part number on the filter label or on the catalogue. Clean the bowl; check the gaskets conditions and replace if necessary. Insert the clean element and the spring into his seat, handling with care and cleanliness. Replace the cover on the filter head with the screw.
We recommend the stocking of a spare UFI filter element for timely replacement when required.



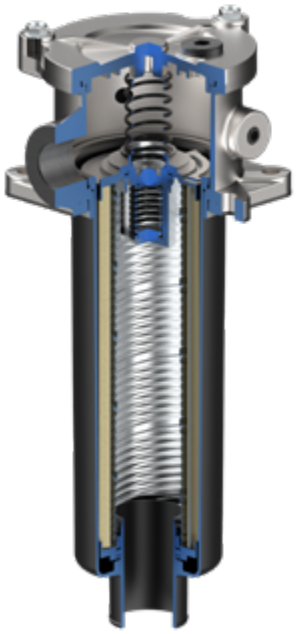

FILTER ELEMENT

					AREA (cm^2)	
	A	B	C	Kg	Media F+	Media C+
ERA31	70	28	85	0,20	620	990
ERA32	70	28	130	0,25	1.000	1.600
ERA33	70	40	210	0,40	1.660	2.670
ERA41	99	40	211	0,75	3.800	4.280
ERA42	99	40	250	0,90	4.550	5.100

The used filter elements cannot be cleaned and are classified as “Dangerous waste material”. They must be disposed according to local laws by authorized Companies.
Verify that the Company you choose has the expertise and authorization to dispose this type of waste material.



PRESSURE DROP CURVES (ΔP)

The “Assembly Pressure Drop (Δp)” is obtained by adding the pressure drop values of the Filter Housing and
of the Clean Filter Element corresponding to the considered Flow Rate and it must be lower than 50 kPa (0,5 bar) and should never exceed 1/3 of the bypass valve setting

FILTER HOUSING PRESSURE DROP
(mainly depending on the port size)

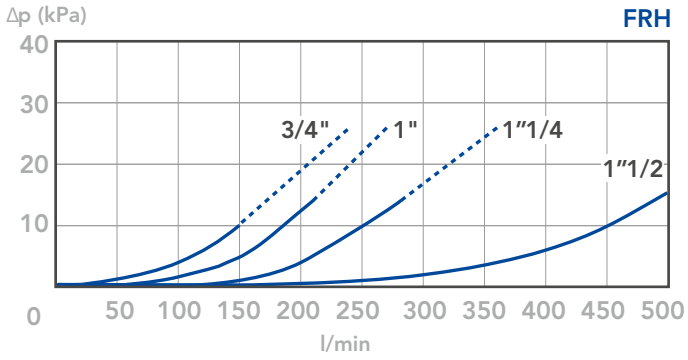

CLEAN FILTER ELEMENT PRESSURE DROP WITH F+, C+ AND ME MEDIA
(depending both on the internal diameter of the element and on the filter media)

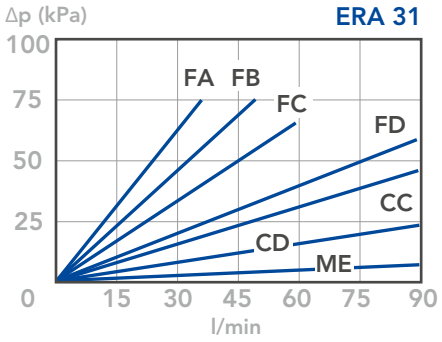

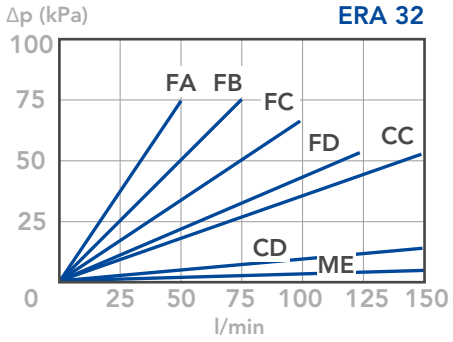

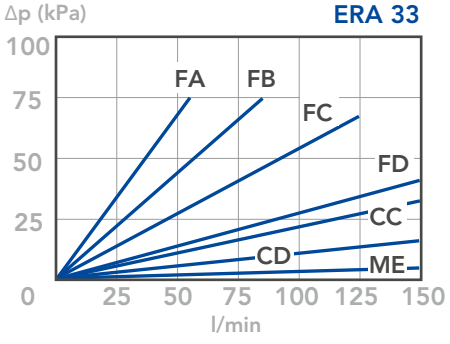

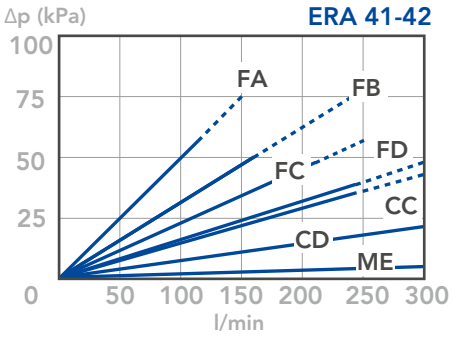



FRH
RETURN FILTERS

BYPASS VALVE PRESSURE DROP

When selecting the filter size, these curves must be taken into account if it is foreseen that any flow peak is to be absorbed by the bypass valve, it also must be of proper configuration to avoid pressure peaks. The valve pressure drop is directly proportional to fluid specific gravity.

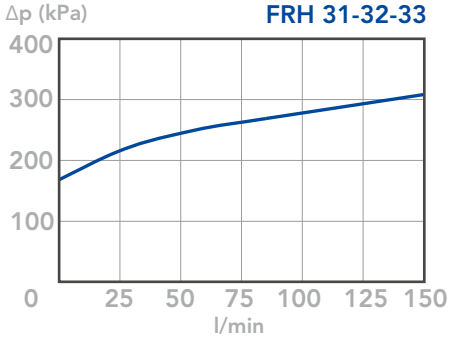

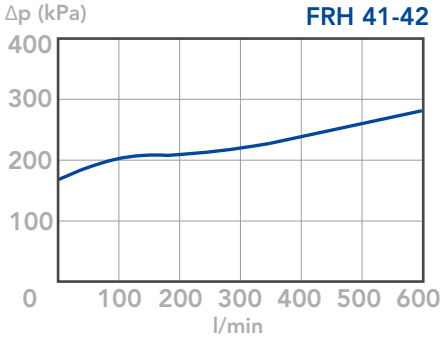

N.B.

All the curves have been obtained with mineral oil having a kinematic viscosity 30 cSt and specific gravity 0,86 Kg/dm3; for fluids with different features, please consider the factors described in the first part of this catalogue. All the curves are obtained from test done at the UFI HYDRAULIC DIVISION Laboratory, according to the specification ISO 3968. In case of discrepancy, please check the contamination level, viscosity and features of the fluid in use.





OFF-LINE FILTERS

FLUSHING AND HYDRAULIC-FLUID TRANSFER

Application:
Off-line filters are used to maintain "Roll-Off-Cleanliness" in the hydraulic-fluid circuit at the time a new vehicle leaves the manufacturing assembly-line or a vehicle undergoes repair or re-build. Stationary off-line filters work at system-pressure and can be connected to the hydraulic-circuit of the vehicle in such a way that it becomes the "power-supply." The circuit can be cycled to flush out and remove harmful contamination to pre-condition the oil for longevity and improved service-life. Off-line filters maintain "Roll-Off"-Cleanliness. Where the level of cleanliness is insufficient to remove harmful contamination from "Built-in," "Brought-in", "Induced-in" and "Taken-in" sources, the result can be premature vehicle breakdown/failure within the warranty period.

User Benefits:
- "Built-in" – contamination left in the system or in componentry during initial vehicle assembly or vehicle repair/re-build.
- "Brought-in" - components and/or sub-assemblies "brought-in" or manufactured off-line/off-site, may be contaminated and add to the overall levels of contamination on the vehicle during assembly, repair or re-build.
- "Induced-in" - contamination internally "induced" into the system during operation and performance-testing or caused by wear, corrosion, agitation, oxidation or hydraulic-fluid degradation.
- "Taken-in" - Externally introduced contamination that enters a system from the atmosphere via insufficiently sealed orifices, covers or access-points.

FOF-ROL
OFF-LINE FILTERS



MATERIALS

Head and covers: Aluminium alloy
Bowl: Steel
Element Holder:
Polyammide FOF24
Alluminium Alloy FOF3+ and FOF4+
Seals: NBR Nitrile (FKM Fluoroelastomer on request)
Indicator housing: Brass

PRESSURE

Max. working: 1 MPa (10 bar)
Collapse, differential for the filter element (ISO 2941):
1MPa (10 bar)

BYPASS VALVE

Setting: 150 kPa (1,5 bar) ± 10%

WORKING TEMPERATURE

From -25° to +110° C

COMPATIBILITY (ISO 2943)

Full with fluids: HH-HL-HM-HV-HTG
(according to ISO 6743/4)
For fluids different than the above mentioned,
please contact our Customer Service

HYDRAULIC DIAGRAM

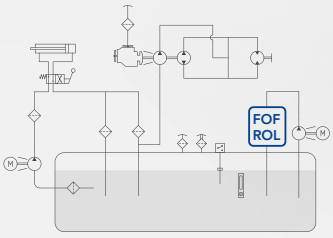

Is this datasheet the latest release? Please check on our website.

FOF
OFF-LINE FILTERS

ORDERING AND OPTION CHART

F	O	F	COMPLETE FILTER FAMILY						FILTER ELEMENT FAMILY	E	R	F
			SIZE & LENGHT	24	34	36	41	44	SIZE & LENGHT			
			PORT TYPE									
			B = BSP thread	B	-	-	-	-				
			N = NPT thread	N	-	-	-	-				
			S = SAE thread	S	-	-	-	-				
			F = SAE flange 3000 psi	F	F	F	F	F				
			PORT SIZE									
			12 = 1" 1/2	12	-	-	-	-				
			20 = 2"1/2	-	20	20	-	-				
			24 = 3"	-	-	-	24	24				
			32 = 4"	-	-	-	32	32				
			BYPASS VALVE									
			W = without bypass	W	W	W	W	W				
			F = 150 kPa (1,5 bar)	F	F	F	F	F				
			SEALS						SEALS			
			N = NBR Nitrile	N	N	N	N	N				
			F = FKM Fluoroelastomer	F	F	F	F	F				
			FILTER MEDIA						FILTER MEDIA			
			FA = fibreglass 5 µm(c) β>1.000	FA	FA	FA	FA	FA				
			FB = fibreglass 7 µm(c) β>1.000	FB	FB	FB	FB	FB				
			FC = fibreglass 12 µm(c) β>1.000	FC	FC	FC	FC	FC				
			FD = fibreglass 21 µm(c) β>1.000	FD	FD	FD	FD	FD				
			CC = impregnated cellulose 10 µm β>2	CC	CC	CC	CC	CC				
			ME = metal wire mesh 60 µm	ME	ME	ME	ME	ME				
			WR = water removal *	WR	WR	WR	WR	WR				
			CLOGGING INDICATOR**									
			03 = port, plugged	03	03	03	03	03				
			5B = visual differential 130 kPa (1,3 bar)	5B	5B	5B	5B	5B				
			6B = electrical differential 130 kPa (1,3 bar)	6B	6B	6B	6B	6B				
			7B = indicator 6B with LED	7B	7B	7B	7B	7B				
			T0 = elect. diff. 130 kPa (1,3 bar) with thermostat 30°C	T0	T0	T0	T0	T0				
			ACCESSORIES									
			W =without accessory	W	W	W	W	W				
			M = magnetic core	M	M	M	M	M				
			ACCESSORIES									
			W =without accessory	W	W	W	W	W				
			B = mounting brackets	B	B	B	B	B				



ROL
OFF-LINE FILTERS

ORDERING AND OPTION CHART

R	O	L	COMPLETE FILTER FAMILY			FILTER ELEMENT FAMILY	C	R	C
			SIZE & LENGHT	240	340	SIZE & LENGHT			
			FILTER MEDIA			FILTER MEDIA			
			FT = fibreglass 5 µm(c) β>1.000	FT	FT				
			FC = fibreglass 7 µm(c) β>1.000	FC	FC				
			FD = fibreglass 12 µm(c) β>1.000	FD	FD				
			FV = fibreglass 21 µm(c) β>1.000	FV	FV				
			CD = impregnated cellulose 10 µm β>2	CD	CD				
			MS = metal wire mesh 60 µm	MS	MS				
			WR = water removal *	WR	WR				
			SEALS			SEALS			
			1 = NBR Nitrile	1	1				
			2 = FKM Fluoroelastomer	2	2				
			BYPASS VALVE						
			S = without bypass	S	S				
			F = 150 kPa (1,5 bar)	F	F				
			PORT TYPE						
			B = BSP thread	B	-				
			N = NPT thread	N	-				
			S = SAE thread	S	-				
			F = SAE flange 3000 psi	F	F				
			PORT SIZE						
			7 = 1" 1/2	7	-				
			9 = 2"1/2	-	9				
			CLOGGING INDICATOR **						
			03 = port, plugged	03	03				
			5B = visual differential 130 kPa (1,3 bar)	5B	5B				
			6B = electrical differential 130 kPa (1,3 bar)	6B	6B				
			7B = indicator 6B with LED	7B	7B				
			T0 = elect. diff. 130 kPa (1,3 bar) with thermostat 30°C	T0	T0				
			ACCESSORIES						
			S =without accessory	S	S				
			M = magnetic core	M	M				
			ACCESSORIES						
			S =without accessory	S	S				
			B = mounting brackets	B	B				

NOTES

* Water removal media, see “Hydro dry” chapter

** When the filter is ordered with FKM seals, the first digit of the indicator code is a letter (please see Clogging Indicator Chapter for further details)

FOF-ROL
OFF-LINE FILTERS

SPARE PARTS ELEMENTS

FILTER HOUSING	FILTER ELEMENT	CLOGGING INDICATOR	ACCESSORY
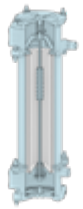			
B O F	E R F		

SPARE SEAL KIT

	NBR	FKM
FOF24 ROL240	521.0101.2	521.0102.2
FOF34 ROL340	521.0103.2	521.104.2
FOF36	521.0103.2	521.104.2
FOF41	521.0105.2	521.0106.2
FOF44	521.0105.2	521.0106.2

SPARE SPRING

FOF24 ROL240	008.0269.1
FOF34 ROL340	008.0275.1
FOF36	008.0275.1
FOF41	008.0283.1
FOF44	008.0283.1



INSTALLATION DRAWING

FOF 24 - 34 - 36

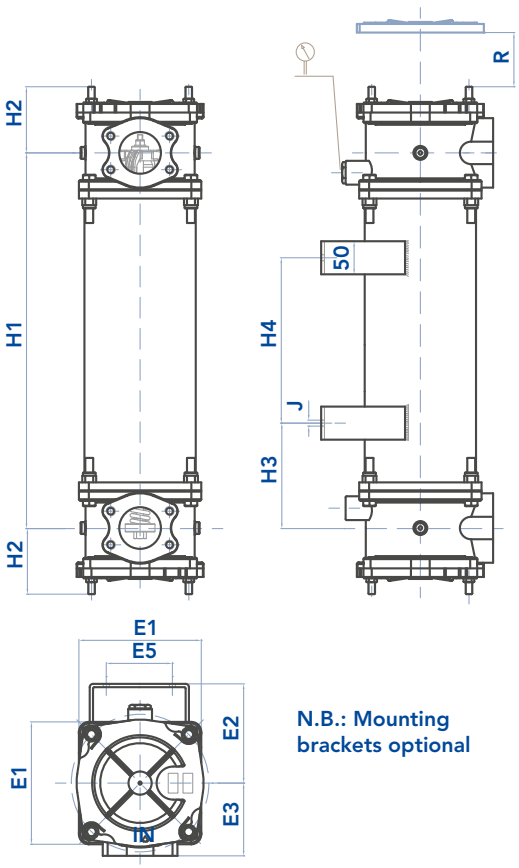

N.B.: Mounting brackets optional

FOF 41 - 44

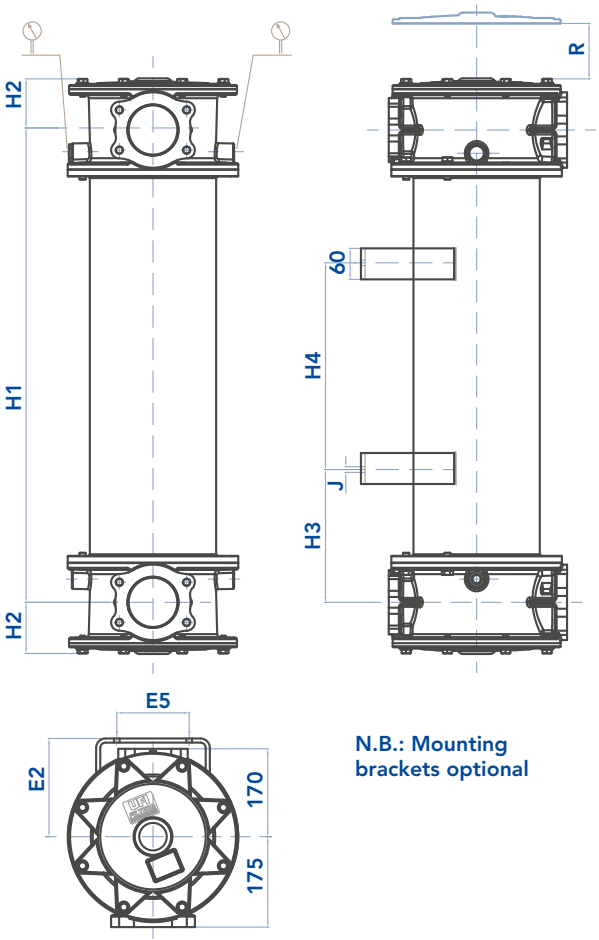

N.B.: Mounting brackets optional

FILTER HOUSING

	PORT SIZE	E1	E2	E3	E5	H1	H2	H3	H4	J	R	kg
FOF24 ROL240	1" 1/2	150	132	90	70	513	93	130	250	9	580	18,0
FOF34 ROL340	2" 1/2	185	150	110	100	568	100	135	250	9	620	22,0
FOF36	2" 1/2	185	150	110	100	770	100	165	250	9	820	27,9
FOF41	3" - 4"	-	190	-	140	420	99	160	100	11	600	38,4
FOF44	3" - 4"	-	190	-	140	1.180	99	340	500	11	1.360	66,4

FOF-ROL
OFF-LINE FILTERS



MAINTENANCE

The best time to change your filter element is just before it reaches its maximum dirt-holding capacity. For this reason, we recommend to monitor the pressure of the hydraulic oil flowing through the filter with a clogging indicator. When it is time to change the filter element, switch off the system before opening the filter housing. Unscrew the cover of the filter head and remove the spring (to be hold) and the dirty filter element. Remove the handle. Replace the filter element with an original UFI one, verifying the part number on the filter label or on the catalogue. Check the gaskets conditions and replace if necessary. Reassemble the handle on the element and insert it into its seat, handling with care and cleanliness. Replace the cover on the filter head with the screw. We recommend the stocking of a spare UFI filter element for timely replacement when required.

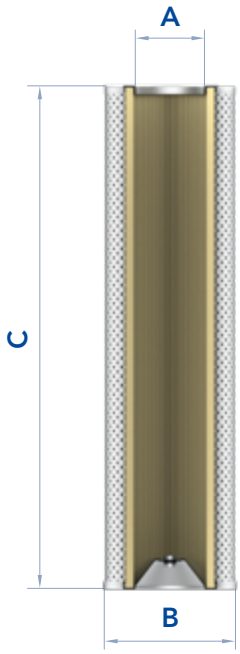

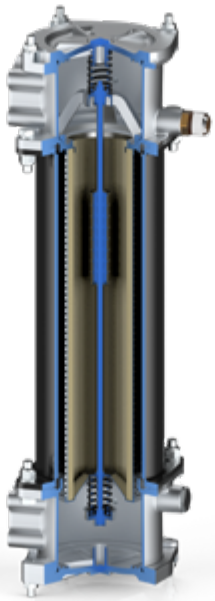

DISPOSAL OF FILTER ELEMENTS

The used filter elements cannot be cleaned and are classified as “Dangerous waste material”. They must be disposed according to local laws by authorized Companies. Verify that the Company you choose has the expertise and authorization to dispose this type of waste material.

FILTER ELEMENT

	A	B	C	KG	AREA (cm^2) Media F+	Media C+	Media M+
ERF24 CRC240	72	106	465	1,50	9.700	11.800	3.670
ERF34 CRC340	92	126	480	2,20	12.800	15.400	5.250
ERF36	92	126	680	3,00	18.200	19.500	7.700
ERF41	157	203	330	3,90	17.900	22.100	6.400
ERF44	157	203	1.090	13,00	60.000	74.000	21.800



PRESSURE DROP CURVES (ΔP)

The “Assembly Pressure Drop (Δp)” is obtained by adding the pressure drop values of the Filter Housing and of the Clean Filter Element corresponding to the considered Flow Rate and it must be lower than 50 kPa (0,5 bar).

FILTER HOUSING PRESSURE DROP
(mainly depending on the port size)

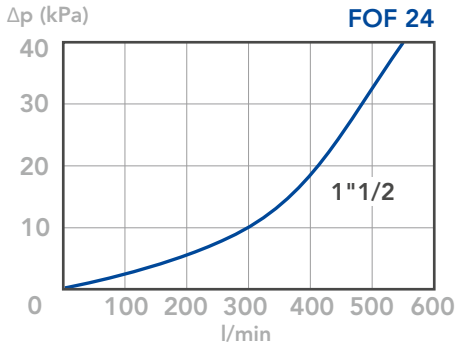

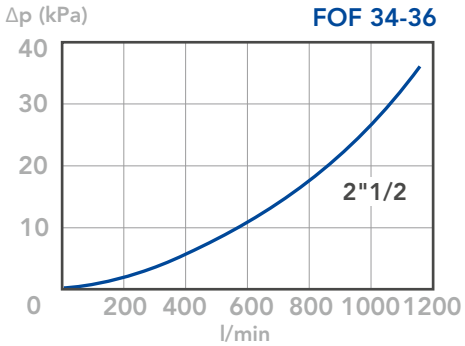

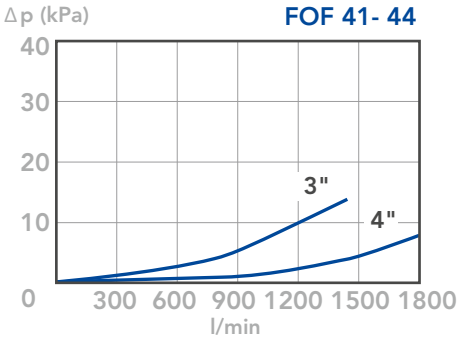

CLEAN FILTER ELEMENT PRESSURE DROP WITH F+, CC AND ME MEDIA
(depending both on the internal diameter of the element and on the filter media)

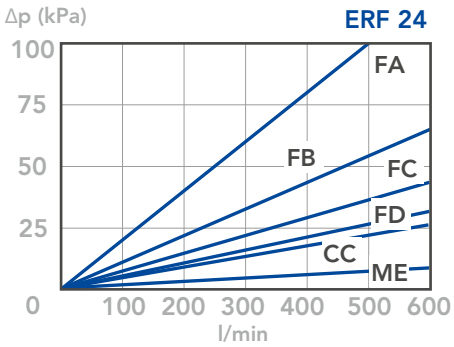

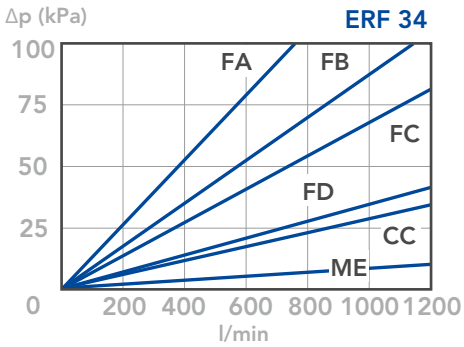

FOF-ROL
OFF-LINE FILTERS

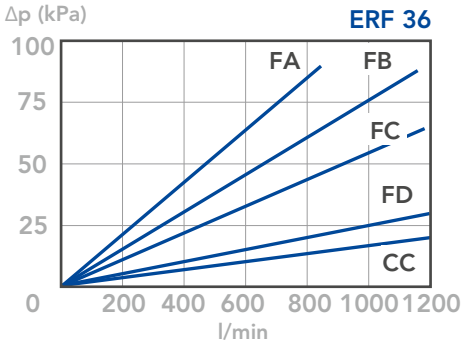

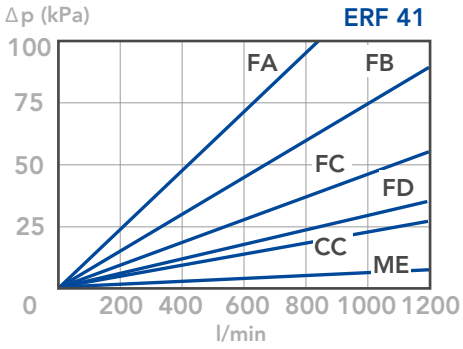

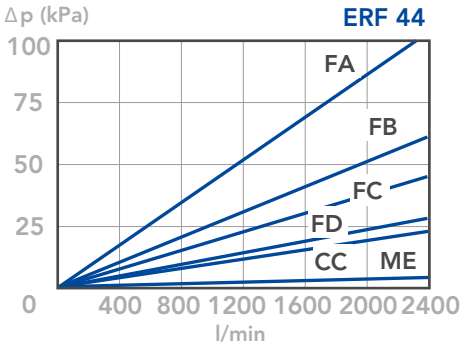

BYPASS VALVE PRESSURE DROP

When selecting the filter size, these curves must be taken into account if it is foreseen that any flow peak is to be absorbed by the bypass valve, it also must be of proper configuration to avoid pressure peaks. The valve pressure drop is directly proportional to fluid specific gravity.

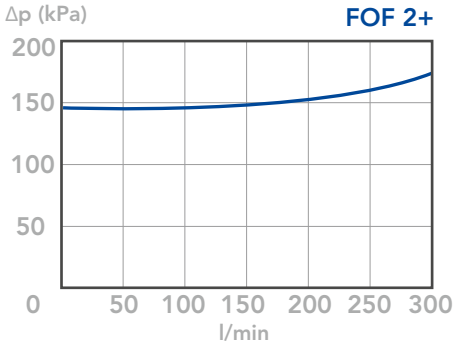

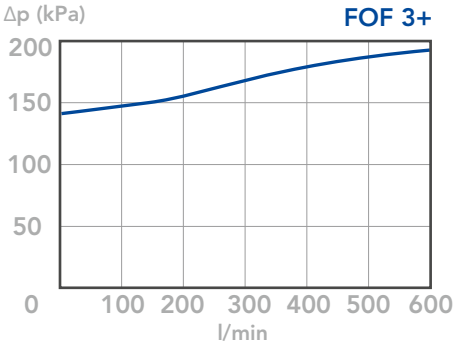

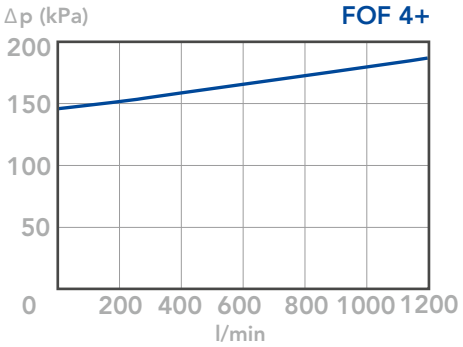

N.B.

All the curves have been obtained with mineral oil having a kinematic viscosity 30 cSt and specific gravity 0,86 Kg/dm3; for fluids with different features, please consider the factors described in the first part of this catalogue. All the curves are obtained from test done at the UFI HYDRAULIC DIVISION Laboratory, according to the specification ISO 3968. In case of discrepancy, please check the contamination level, viscosity and features of the fluid in use.

UOW-GTC
OFF-LINE FILTERS



PORTABLE FILTRATION PACKAGE

Inlet: flexible hose, 2 m long with rigid end 0,5 m long
Outlet: flexible hose, 2 m long with rigid end 0,5 m long
“Y” type filter for pump protection
Gear pump 40 l/min with inbuilt 1 MPa (10 bar) relief valve
Electric motor: three phase 380V - 0,75 kW 1450 rpm - IP54
Double handle for proper and easy transportation

MODEL UOW040T0075A3

Oil transfer and filtration package of clean and compact construction, joining high filtration performances and long life filter element to an easy and handy use.

The filter can be fitted with a visual or electrical clogging indicator, also of differential type.

The filter element, having a wide filtration area (12.800 cm2) and excellent efficiency features, is normally available with filtration degree 5, 7, 12 and 21µm(c) (ßx > 1.000) and WR (Hydro Dry).
Total weight 50 kg.

Filter element, to be ordered apart.
(please refer to the FOF series datasheet for the technical features).



HYDRAULIC DIAGRAM

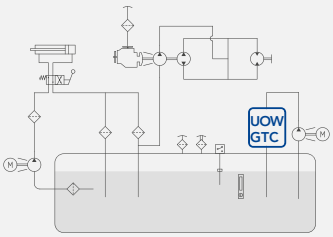

Is this datasheet the latest release? Please check on our website.



UOW
OFF-LINE FILTERS

ORDERING AND OPTION CHART

	U	O	W	WHEELED FILTRATION UNIT
	0	4	0	NOMINAL FLOW RATE
				040 = 40 l/min
				ELECTRICAL MOTOR TYPE
				T = three phases 380V, standard
				M = single phase 220V, optional
0	0	7	5	NOMINAL POWER
				0075 = 0,75 kW
		A	3	VERSION
				A3 = standard version
		X	X	ACCESSORIES
				XX = without accessories

	E	R	F	FILTER ELEMENT FAMILY
		3	4	SIZE & LENGTH
			N	SEALS
				N = NBR Nitrile
				FILTER MEDIA
				FA = fibreglass 5 µm(c) β>1.000
				FB = fibreglass 7 µm(c) β>1.000
				FC = fibreglass 12 µm(c) β>1.000
				FD = fibreglass 21 µm(c) β>1.000
				CC = impregnated cellulose 10 µm β>2
				WR = water removal*



GTC
OFF-LINE FILTERS

ORDERING AND OPTION CHART

	G	T	C	WHEELED FILTRATION UNIT
	0	4	0	NOMINAL FLOW RATE
				040 = 40 l/min
				ELECTRICAL MOTOR TYPE
				T = three phases 380V, standard
				M = single phase 220V, optional
0	0	7	5	NOMINAL POWER
				0075 = 0,75 kW
		A	3	VERSION
				A3 = standard version
		X	X	ACCESSORIES
				XX = without accessories

C	R	C	FILTER ELEMENT FAMILY
3	4	0	SIZE & LENGTH
			FILTER MEDIA
			FT = fibreglass 5 µm(c) β>1.000
			FC = fibreglass 7 µm(c) β>1.000
			FD = fibreglass 12 µm(c) β>1.000
			FV = fibreglass 21 µm(c) β>1.000
			CD = impregnated cellulose 10 µm β>2
			WR = water removal*
			SEALS
			N = NBR Nitrile

NOTES

*Water removal media, see “Hydro dry” chapter.

UOW-GTC
OFF-LINE FILTERS





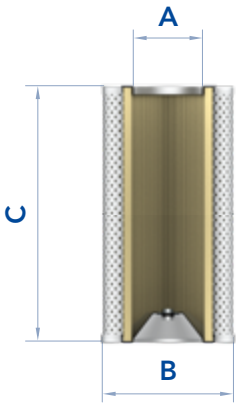

FILTER ELEMENT

					AREA (cm²)	
	A	B	C	Kg	Media F+	Media C+
ERF34 CRC340	92	126	480	2,20	12.800	15.400

N.B.

The UOW mobile off-line filtration unit filters hydraulic fluid at low-pressure with the aid of a self-contained pump, motor and filter.
Oil returning to the tank-reservoir from the return line is filtered by the UOW unit, which drastically reduces "clean-up time."
The mobile filtration unit includes a detailed use and maintenance instruction manual.

HYDRO DRY
OFF-LINE FILTERS

WATER REMOVAL ELEMENTS

The hydro-dry filter elements remove up to 80% of the free water present in the oil.

The hydro-dry elements use the WR filter media, working by absorption and ensuring a high water retention capacity.

To get the maximum water removal efficiency the hydro-dry elements must be used at constant flow rate and low and constant pressure, i.e. the ideal use is in a off-line filter or in a filtration trolley.

The hydro-dry elements remove also the solid contamination (ß21(c) > 1.000), but we recommend that the main part of solid contamination is removed upstream by a dedicated return filter.

The hydro-dry elements are available in standard dimensions, to fit standard filter housings.

A clogging indicator set at 130 kPa (1,3 bar) on the filter housing is recommended for proper replacement of the clogged element.



Is this datasheet the latest release? Please check on our website.



HYDRO DRY
OFF-LINE FILTERS

HYDRO-DRY ELEMENTS ERD SERIES

Fit the FRD series filter housings.

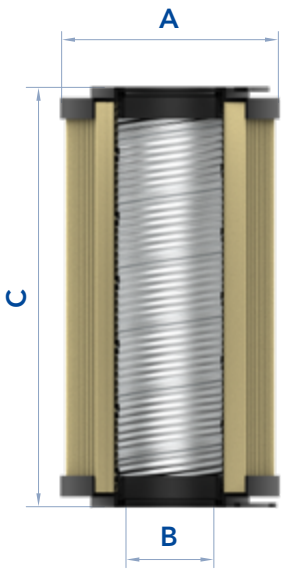

HYDRO-DRY ELEMENTS ERF SERIES

Fit the FOF series filter housings and the UOW filtration unit.

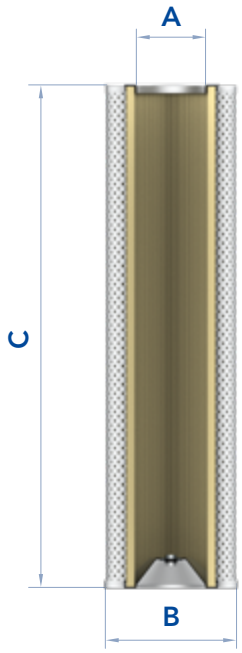

FILTER ELEMENT

	H2O retention capacity (ml)		Recommended max			
	with oil 30 cSt	with oil 98 cSt	flow rate (l/min)	A	B	C
ERD31NWR	60	45	8	70	34	130
ERD41NWR	240	170	20	99	51	211
ERD51NWR	500	350	35	130	74	251
ERD61NWR	1000	750	90	130	74/85	500
ERF24NWR	600	440	60	72	106	465
ERF34NWR	800	580	80	92	126	480





TRANSMISSION FILTERS

COMBINED RETURN & SUCTION FILTER

Application:
Hydraulic transmissions are usually configurated in one of two ways, split or closed-coupled. A split transmission consists of a power unit with hydraulic pump, heat-exchanger, hydraulic filter(s), valves and controls mounted on a tank-reservoir. Split transmissions are typically used in heavy-duty applications. Split transmissions offer a wide range of flexibility in terms of system-configuration for the most efficient use of space and weight distribution. Combined Return & Suction Filters replace the need for suction- or pressure filters for the charge-pump in closed-loop hydrostatic-drive circuits and for return filters in the open-loop hydraulic circuit (Split transmissions).

User Benefits:
- Lightweight construction. Space-saving
- Less piping required / fewer potential leakage points
- Requirement for only one filter instead of two
  1. Filtration of the oil returning from the hydraulic system
  2. Feeding the charge-pump with clean filtered oil
- The charge-pump takes oil at a slight pressure (0.5 bar), avoiding cavitation risks but also contributing to good cold-start behavior
- Charge-pump protection as the oil supplied is already pre-filtered
- Simplified maintenance & Easy filter element removal, with retained contamination

FTA-FTB-KTS
TRANSMISSION FILTERS



MATERIALS

Head: Aluminium alloy
Cover: Polyammide FTA-FTB23
Aluminium alloy FTA-FTB31-32-33
Bowl: Steel
Seals: NBR Nitrile
Indicator housing: Brass

PRESSURE

Max working: 1 MPa (10 bar)
Collapse, differential for the filter element (ISO 2941):
1 MPa (10 bar)

BYPASS VALVE

Setting: 250 kPa (2,5 bar) ± 10%

WORKING TEMPERATURE

From -25° to + 110° C

COMPATIBILITY (ISO 2943)

Full with fluids: HH-HL-HM-HV-HTG
(according to ISO 6743/4)
For fluids different than the above mentioned,
please contact our Customer Service



HYDRAULIC DIAGRAM

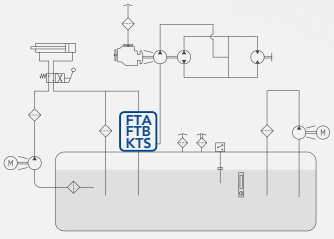

Is this datasheet the latest release? Please check on our website.

FTA-FTB
TRANSMISSION FILTERS

ORDERING AND OPTION CHART

F	T		COMPLETE FILTER FAMILY									
			A = with internal bypass									
			B = with external bypass							FILTER ELEMENT FAMILY	E	T	A
			SIZE & LENGHT	23	31	32	33			SIZE & LENGHT			
		B	PORT TYPE										
			B = BSP thread	B	B	B	B						
			PORT SIZE										
			D3 = 3/4" suction + 3/4" return	D3	-	-	-						
			D4 = 3/4" suction + 1" return	D4	-	-	-						
			T1 = 1 1/4" return + 2x1" suction	-	T1	T1	T1						
		B	BYPASS VALVE										
			B = 250 kPa (2,5 bar) return	B	B	B	B						
		N	SEALS							SEALS	N		
			N = NBR Nitrile	N	N	N	N						
			FILTER MEDIA *							FILTER MEDIA			
			FC = fibreglass 12 $\mu m_{(c)}$ β>1.000	FC	FC	FC	FC						
			FS = fibreglass 16 $\mu m_{(c)}$ β>1.000	FS	FS	FS	FS						
			CLOGGING INDICATOR										
			05 = nr. 2 x 1/8" ports, plugged	05	05	05	05						
			30 = pressure gauge, rear connection	30	30	30	30						
			P6 = SPDT, pressure switch	P6	P6	P6	P6						
			ACCESSORIES										
			A = pressurisation valve	A	A	A	A						
			B = press. valve + drain hole	B	B	B	B						
			C = press. valve + suction bypass	C	C	C	C						
			D = press. valve + drain hole + suction bypass	D	D	D	D						
		X	ACCESSORIES										
			X= no other accessory available	X	X	X	X						

SPARE PARTS ELEMENTS

FILTER HOUSING	FILTER ELEMENT	CLOGGING INDICATOR	ACCESSORIES
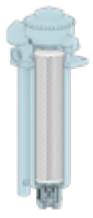	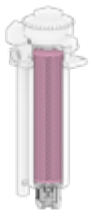	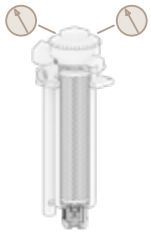	
B T B N X	E T A N		



KTS
TRANSMISSION FILTERS

ORDERING AND OPTION CHART

K	T	S	COMPLETE FILTER FAMILY				
			SIZE & LENGHT	110	210	220	230
			FILTER MEDIA*				
			FD = fibreglass 12 $\mu m_{(c)}$ β>1.000	FD	FD	FD	FD
			FS = fibreglass 16 $\mu m_{(c)}$ β>1.000	FS	FS	FS	FS
		1	SEALS				
			1 = NBR Nitrile	1	1	1	1
			BYPASS TYPE				
			B = Internal 250 kPa (2,5 bar)	B	B	B	B
			T = External 250 kPa (2,5 bar)	T	T	T	T
		B	PORT TYPE				
			B = BSP thread	B	B	B	B
			PORT SIZE				
			4 = 3/4" suction + 3/4" return	4	-	-	-
			D= 3/4" suction + 1" return	D	-	-	-
			E = 1 1/4" return + 2x1" suction	-	E	E	E
			CLOGGING INDICATOR				
			05 = nr. 2 x 1/8" ports, plugged	05	05	05	05
			30 = pressure gauge, rear connection	30	30	30	30
			P6 = SPDT, pressure switch	P6	P6	P6	P6
			ACCESSORIES				
			A = pressurisation valve	A	A	A	A
			B = press. valve + drain hole	B	B	B	B
			C = press. valve + suction bypass	C	C	C	C
			D = press. valve + drain hole + suction bypass	D	D	D	D
		X	ACCESSORIES				
			X= no other accessory available	X	X	X	X

FILTER ELEMENT FAMILY	C	K	T
SIZE & LENGHT			
FILTER MEDIA			
SEALS	1		

SPARE SEAL KIT

	NBR	FKM
FTA2-FTB2 KTS1	521.0121.2	521.0122.2
FTA3-FTB3 KTS2	521.0123.2	521.0124.2

* For any different media requirement, please check availability with our Customer Service

FTA-FTB-KTS
TRANSMISSION FILTERS

INSTALLATION DRAWING

FTA 23
WITH INTERNAL BY-PASS

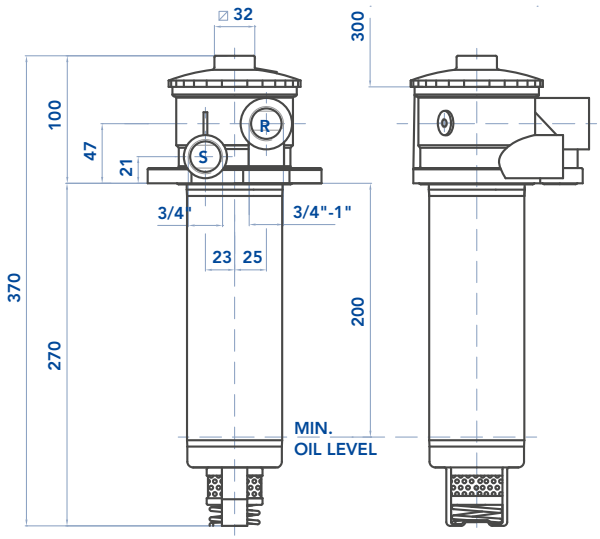

FTB 23
WITH EXTERNAL BY-PASS

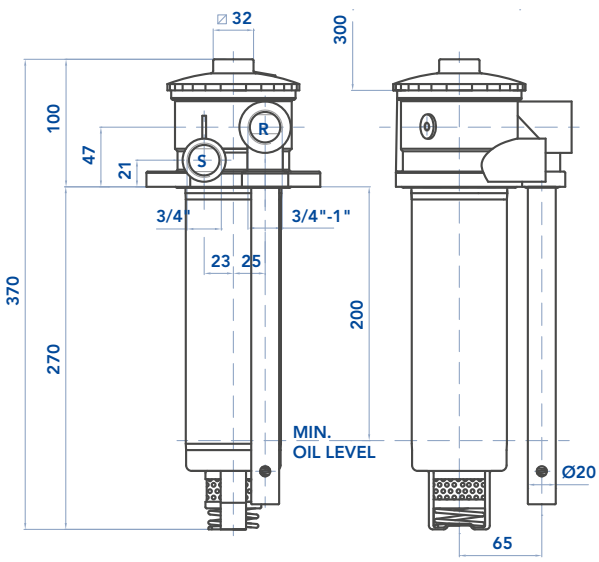

TANK MOUNTING
PATTERN

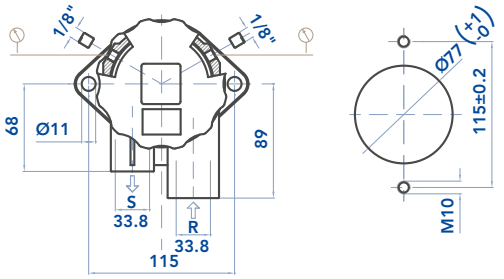

TANK MOUNTING
PATTERN

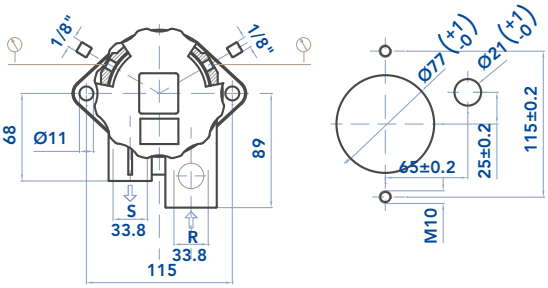

WORKING SCHEME

Options A and C
are recommended for horizontal filter mounting.

Options B and D
are recommended for vertical filter mounting (drain hole).

Options C and D
a 125 µm strainer protects the emergency valve in case of brief lack of oil in the suction of the boost pump (situation to be anyway avoided)

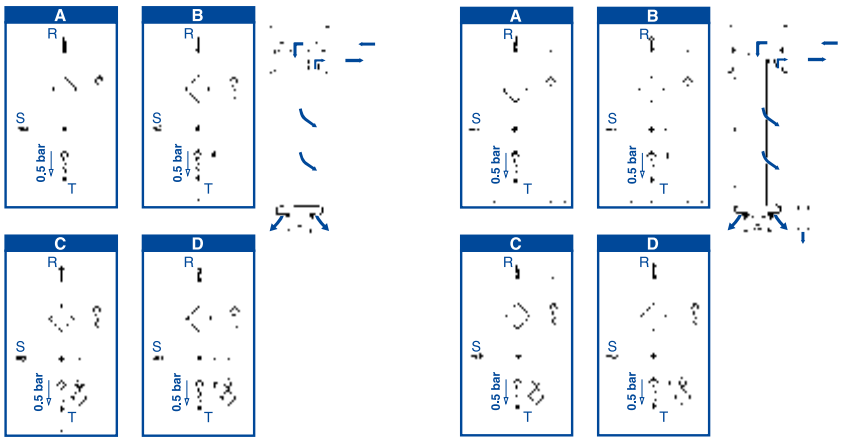



INSTALLATION DRAWING

FTA 31 - 32 - 33
WITH INTERNAL BY-PASS

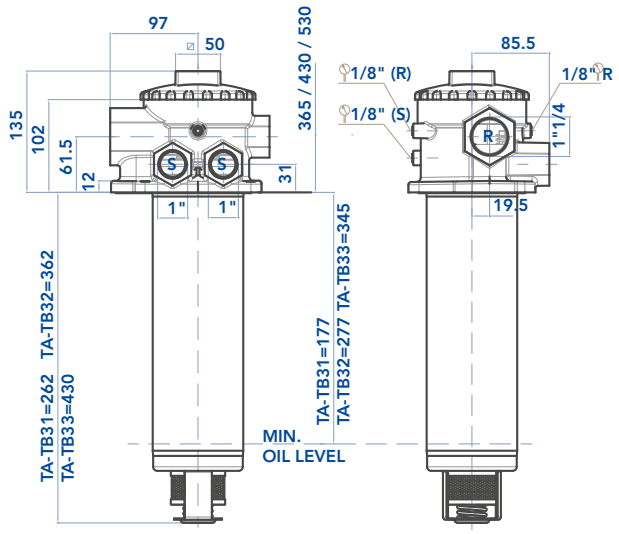

FTB 31 - 32 - 33
WITH EXTERNAL BY-PASS

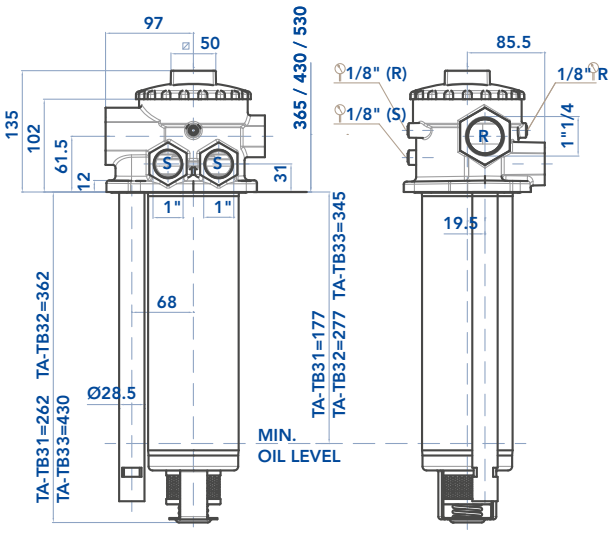

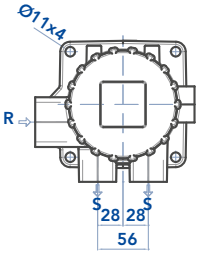

TANK MOUNTING
PATTERN

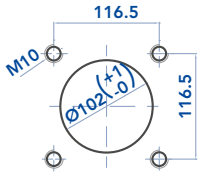

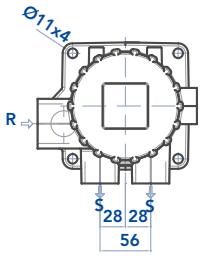

TANK MOUNTING
PATTERN

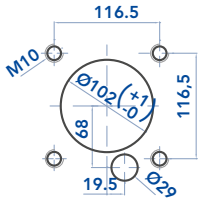

WORKING SCHEME

Options A and C
are recommended for horizontal filter mounting.

Options B and D
are recommended for vertical filter mounting (drain hole).

Options C and D
a 125 µm strainer protects the emergency valve in case of brief lack of oil in the suction of the boost pump (situation to be anyway avoided)

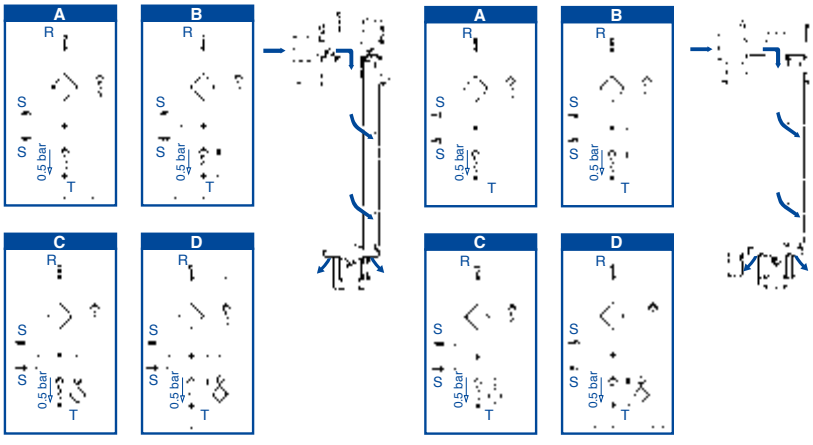

FTA-FTB-KTS
TRANSMISSION FILTERS

MAINTENANCE

The best time to change your filter element is just before it reaches its maximum dirt-holding capacity. For this reason, we recommend to monitor the pressure of the hydraulic oil flowing through the filter with a clogging indicator. When it is time to change the filter element, switch off the system before opening the filter housing.
Unscrew the plug and extract the handle from the housing. Remove the dirty filter element and replace it with an original UFI element, verifying the part number on the filter label or on the catalogue. Clean the handle, check the handle O-Ring condition and lubricate with oil.
Check the gaskets conditions and replace if necessary. Insert the clean element on the shank of the handle, handling with care and cleanliness. Replace the handle complete with filter element in the housing ensuring the sealing of the gasket. Tighten the plug until it stops with the following tightening torques:
KTS 105-110 Series: 25 Nm +5/0
KTS 210-220-230 Series: 35 Nm +5/0
We recommend the stocking of a spare UFI filter element for timely replacement when required.

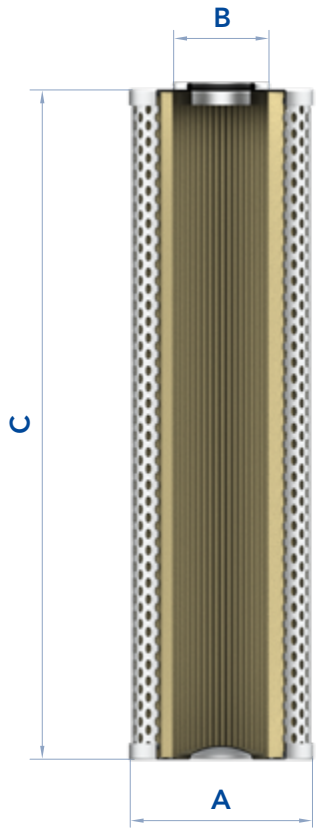

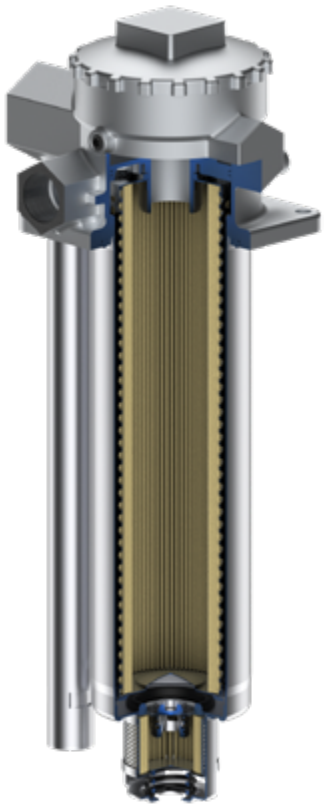

FILTER ELEMENT

					AREA (cm²)
	A	B	C	KG	Media F+
ETA23 CKT110	63,5	28	230	0,40	1.900
ETA31 CKT210	90	40	232	0,55	2.800
ETA32 CKT220	90	40	333	0,77	4.100
ETA33 CKT230	90	40	400	0,85	4.900

The used filter elements cannot be cleaned and are classified as “Dangerous waste material”. They must be disposed according to local laws by authorized Companies.
Verify that the Company you choose has the expertise and authorization to dispose this type of waste material.



PRESSURE DROP CURVES (ΔP)

The “Assembly Pressure Drop (Δp)” is obtained by adding the pressure drop values of the Filter Housing and of the Clean Filter Element corresponding to the considered Flow Rate and it must be lower than 40 kPa (0,4 bar) and should never exceed 1/3 of the bypass valve setting.

FILTER HOUSING PRESSURE DROP
(mainly depending on the port size)

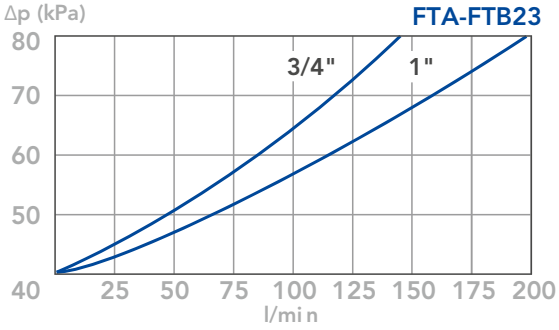

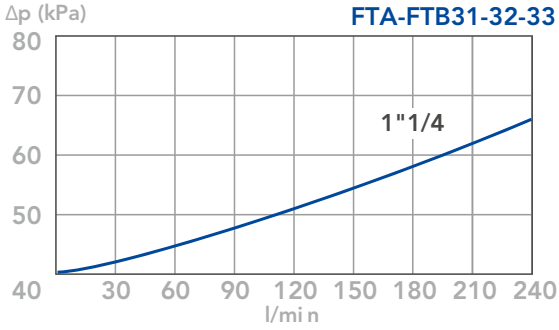

CLEAN FILTER ELEMENT PRESSURE DROP
(depending both on the internal diameter of the element and on the filter media)

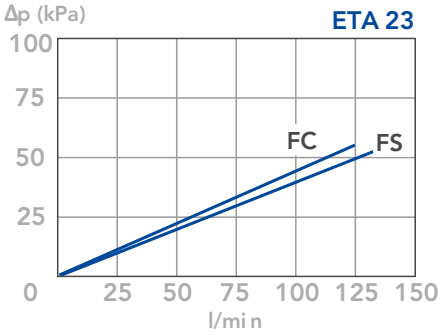

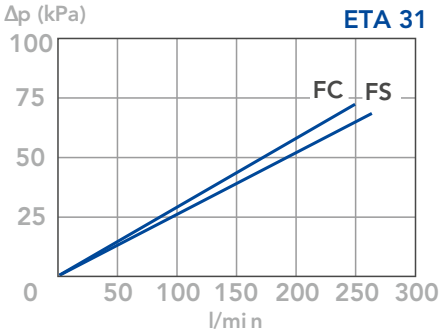

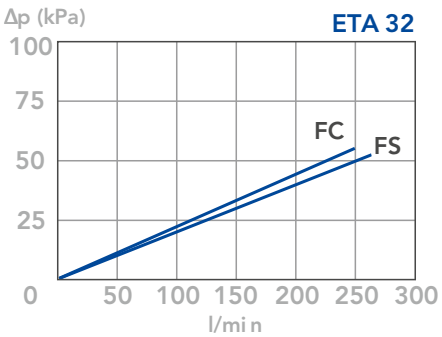

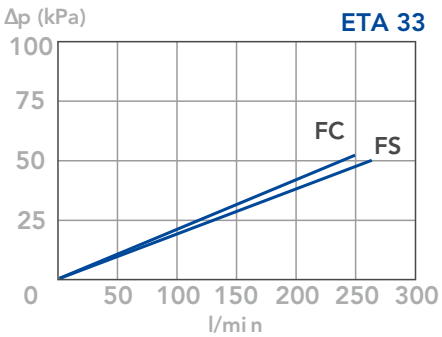



FTA-FTB-KTS
TRANSMISSION FILTERS

BYPASS VALVE PRESSURE DROP

When selecting the filter size, these curves must be taken into account if it is foreseen that any flow peak is to be absorbed by the bypass valve, it also must be of proper configuration to avoid pressure peaks. The valve pressure drop is directly proportional to fluid specific gravity.

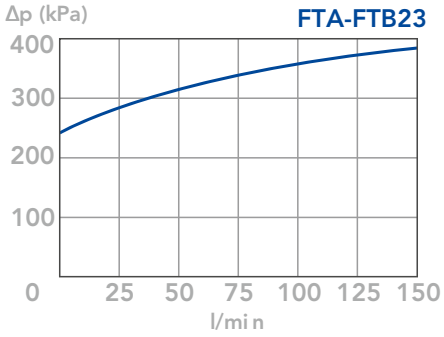

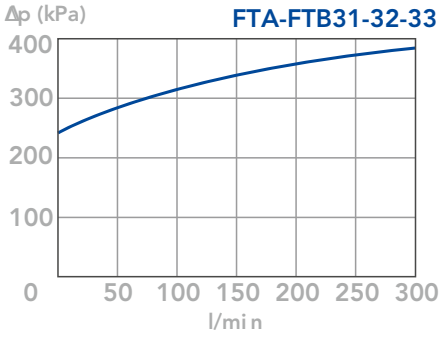

N.B.

All the curves have been obtained with mineral oil having a kinematic viscosity 30 cSt and specific gravity 0,86 kg/dm3; for fluids with different features, please consider the factors described in the first part of this catalogue. All the curves are obtained from test done at the UFI HYDRAULIC DIVISION Laboratory, according to the specification ISO 3968.
In case of discrepancy, please check the contamination level, viscosity and features of the fluid in use.



AIR FILTERS



AIR FILTRATION LINE

Application:
Air breathers / air filters should be fitted to the top of the tank-reservoir to protect against an ingress of contamination from the atmosphere. The “breather” (with or without filler-cap) forms a barrier between the air exiting and entering the free-air space above the level of hydraulic oil in the tank-reservoir.
The air-breather represents one of the most important anti-contamination methods in a modern day hydraulic system.

User Benefits:
- System protection from airborne particulate contamination and humidity.
- Direct-mounting to the tank-reservoir avoids additional piping.
- Available with lockable oil-filler-cap to prevent unauthorized access to the tank.



CBA-TM
AIR FILTERS

DESCRIPTION

Air breather, hand mounting

MATERIALS

Housing, flange and basket: zinc plated steel
Cap: chrome plated
Filter element ((not replaceable):
Impregnated cellulose 3µm (Filtration degree in air)
Polyurathan foam 10µm (Filtration degree in air)

COMPATIBILY (ISO 2943)

Full with fluids HH-HL-HM-HV-HTG (according to ISO 6743/4).
For fluids different than the above mentioned, please contact our Customer Service.

WORKING TEMPERATURE:

From -25°C to +110°C

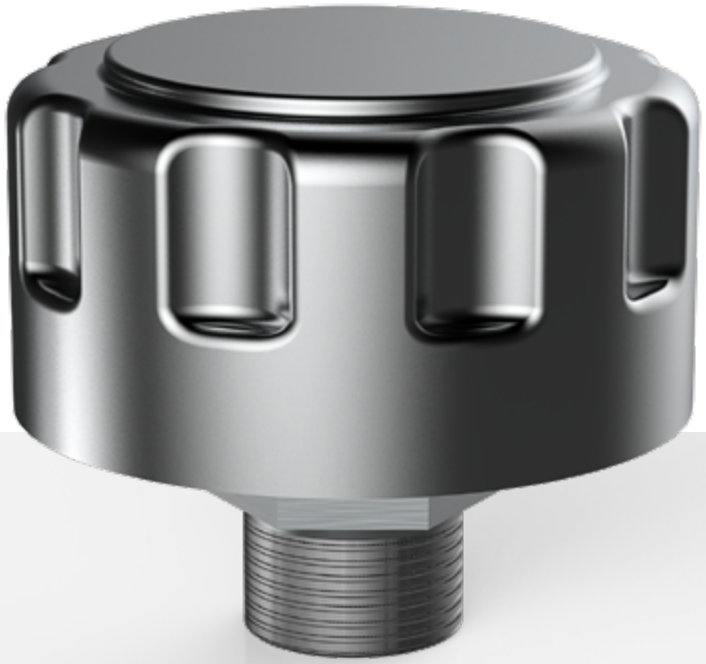

HYDRAULIC DIAGRAM

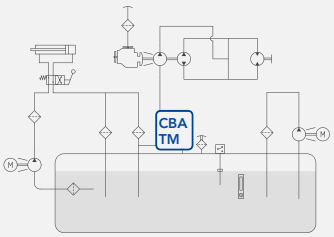

Is this datasheet the latest release? Please check on our website.

CBA-TM
AIR FILTERS



ORDERING AND OPTION CHART

C	B	A			
			COMPLETE FILTER FAMILY		
			SIZE & LENGHT	**11**	**21**
		B	**PORT TYPE**		
			B = BSP thread	B	B
			PORT SIZE		
			02 = 1/4"	02	-
			06 = 3/4"	-	06
			FILTER MEDIA		
			CC = impregnated cellulose	CC	CC
			PE = polyurathan foam	PE	PE

INSTALLATION DRAWING

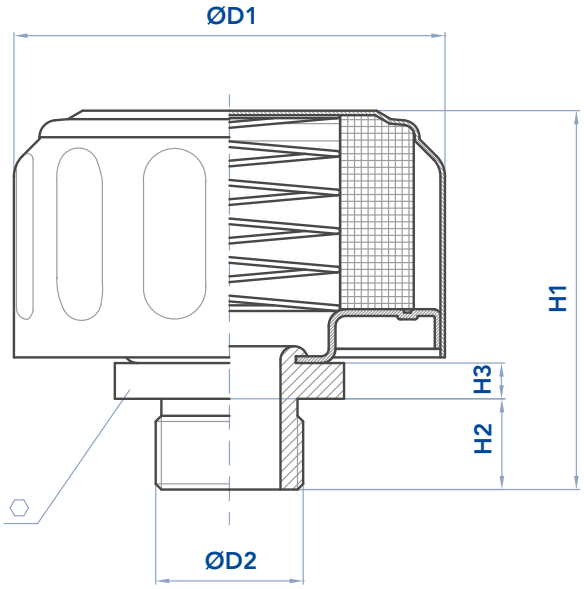

DIMENSIONS

	filtr. µm	flow rate (l/min)	D1	D2	⬡	H1	H2	H3
CBA11B02CC TM150B1	3	150	47	1/4" BPS	19	45	12	7
CBA11B02PE TM450B1	10	300	47	1/4" BPS	19	45	12	7
CBA21B06CC TM178B4	3	450	76	3/4" BSP	35	66	16	7
CBA21B06PE TM478B4	10	750	76	3/4" BSP	35	66	16	7

CBB-FA
AIR FILTERS



DESCRIPTION

Air breather, repleaceble element

MATERIALS

Housing: zinc plated steel

REPLACEABLE ELEMENT

Air breathers with threaded connection by zinc plated steel. Replaceable filter element, by impregnated cellulose 10µm. (Filtration degree in air)

COMPATIBILY (ISO 2943)

Full with fluids HH-HL-HM-HV-HTG (according to ISO 6743/4). For fluids different than the above mentioned, please contact our Customer Service.

WORKING TEMPERATURE

From -25°C to +110°C

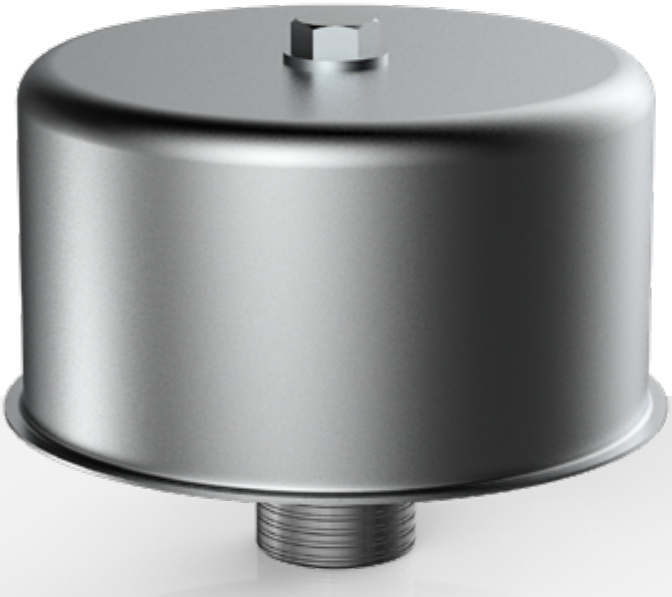

HYDRAULIC DIAGRAM

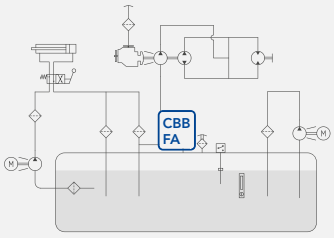

Is this datasheet the latest release? Please check on our website.

CBB-FA
AIR FILTERS



ORDERING AND OPTION CHART

C	B	B	COMPLETE FILTER FAMILY				FILTER ELEMENT FAMILY	E	B	B
			SIZE & LENGHT	11	21	31	SIZE & LENGHT			
			PORT TYPE							
			B = BSP thread	B	B	B				
			M = metric thread	M	M	M				
			PORT SIZE							
			02 = 1/4”	02	-	-				
			03 = 3/8”	03	-	-				
			04 = 1/2”	-	04	-				
			06 = 3/4”	-	06	-				
			08 = 1”	-	-	08				
			12 = M 12x1,5 (metric only)	12	-	-				
			16 = M 16x1,5 (metric only)	-	16	-				
C	D		FILTER MEDIA				FILTER MEDIA	C	D	
			CD = impregnated cellulose	CD	CD	CD				

INSTALLATION DRAWING

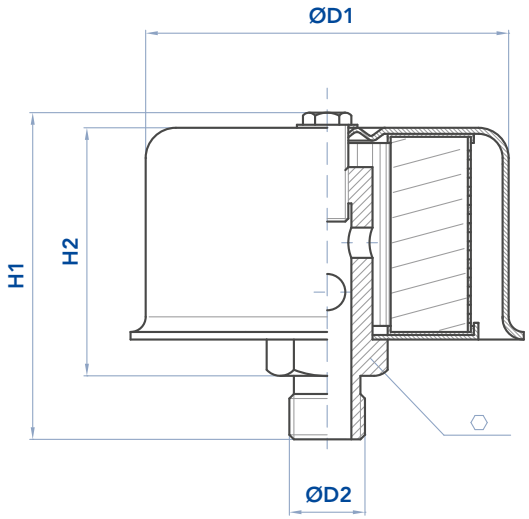

DIMENSIONS

	filtr. µm	flow rate (l/min)	D1	D2	⬡	H1	H2	KG
CBB11M12CD FA 4733.1	10	200	60	M12 X 1,5	17	56	43	0,16
CBB11B03CD FA 4733.1A	10	200	60	3/8" BSP	22	56	43	0,16
CBB11B02CD FA 4733.3	10	200	60	1/4" BSP	22	56	43	0,16
CBB21M16CD FA 4733.2	10	500	82	M16 X 1,5	22	71	53	0,30
CBB21B04CD FA 4733.4	10	500	82	1/2" BSP	24	71	53	0,30
CBB21B06CD FA 4733.4A	10	500	82	3/4" BSP	32	71	53	0,30
CBB31B08CD FA 4733.5	10	500	115	1" BSP	40	100	76	0,30

CBC-TSP
AIR FILTERS

DESCRIPTION

Air breather filter, extension tube available on request

MATERIALS

Housing: Plastic
Basket: Plastic
Seals: Nitrile NBR

SPARE FILTER ELEMENT

Type EBC21NCC: Impregnated Cellulose
Filtration degree (in air): 3µm

COMPATIBILY (ISO 2943)

Full with fluids HH-HL-HM-HV-HTG (according to ISO 6743/4). For fluids different than the above mentioned, please contact our Customer Service.

WORKING TEMPERATURE

From -25°C to +110°C



HYDRAULIC DIAGRAM

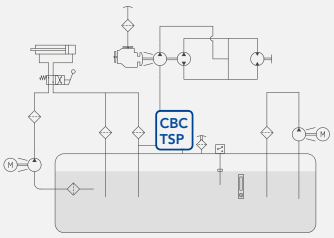

Is this datasheet the latest release? Please check on our website.

CBC-TSP
AIR FILTERS

ORDERING AND OPTION CHART

C	B	C	COMPLETE FILTER FAMILY		FILTER ELEMENT FAMILY	E	B	C
	2	1	SIZE & LENGHT	21	SIZE & LENGHT	2	1	
		S	CONNECTION TYPE					
			S = flange	S				
	0	0	PORT SIZE					
			00 = DIN 24557/2	00				
		W	PRESSURIZATION VALVE					
			W = without	W				
		N	SEALS		SEALS	N		
			N = NBR Nitrile	N				
	C	C	FILTER MEDIA		FILTER MEDIA	C	C	
			CC = impregnated cellulose	CC				
		W	ACCESSORIES					
			W =without accessory	W				

ORDERING AND OPTION CHART

T	S	P	COMPLETE FILTER FAMILY		FILTER ELEMENT FAMILY	C	P	S
			SIZE & LENGHT	120	SIZE & LENGHT			
	C	D	FILTER MEDIA		FILTER MEDIA	C	D	
			CC = impregnated cellulose	CD				
		1	SEALS		SEALS	1		
			1 = NBR Nitrile	1				
		S	CONNECTION TYPE					
			S = flange	S				
		S	PORT SIZE					
			S = DIN 24557/2	S				
		0	PRESSURIZATION VALVE					
			0 = without	0				
		S	ACCESSORIES					
			W = without	S				

INSTALLATION DRAWING

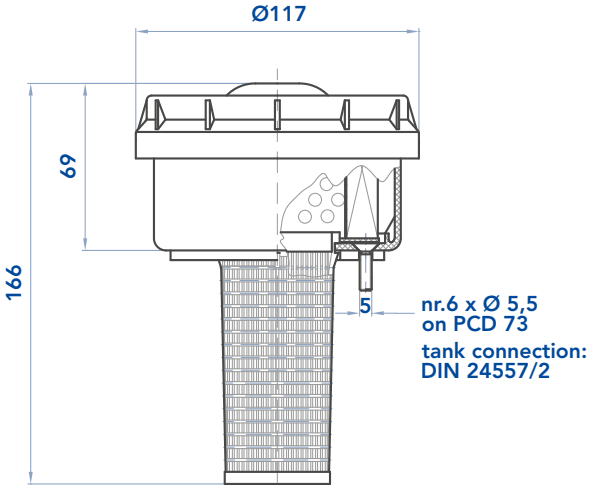

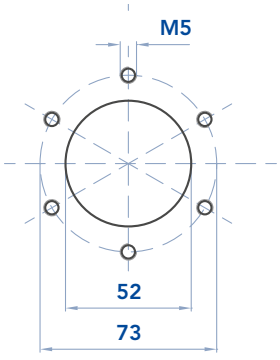

Tank mounting holes



CBD-FA
AIR FILTERS

DESCRIPTION

Air breather, thread mounting

MATERIALS

Housing: Painted steel (black)

SPARE FILTER ELEMENT

VD - Velvet mesh
Filtration degree (in air) 10µm.
FD – Fibreglass (on request only)
Filtration degree (in air) 2,5µm.
CD – Impregnated cellulose (on request only)
Filtration degree (in air) 10µm.

COMPATIBILY (ISO 2943)

Full with fluids HH-HL-HM-HV-HTG (according to ISO 6743/4). For fluids different than the above mentioned, please contact our Customer Service .

WORKING TEMPERATURE

From -25°C to +110°C



HYDRAULIC DIAGRAM

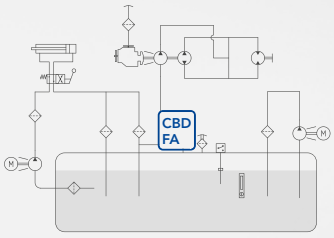

Is this datasheet the latest release? Please check on our website.



CBD-FA
AIR FILTERS

ORDERING AND OPTION CHART

C	B	D	COMPLETE FILTER FAMILY				FILTER ELEMENT FAMILY	E	B	D
			SIZE & LENGHT	11	12	13	SIZE & LENGHT			
		B	PORT TYPE							
			B = BSP thread	B	B	B				
	1	6	PORT SIZE							
			16 = 2"	16	16	16				
			FILTER MEDIA				FILTER MEDIA			
			VD = velvet mesh	VD	VD	VD				
			FD = fibreglass	FD	FD	FD				
			CD = impregnated cellulose	CD	CD	CD				

INSTALLATION DRAWING

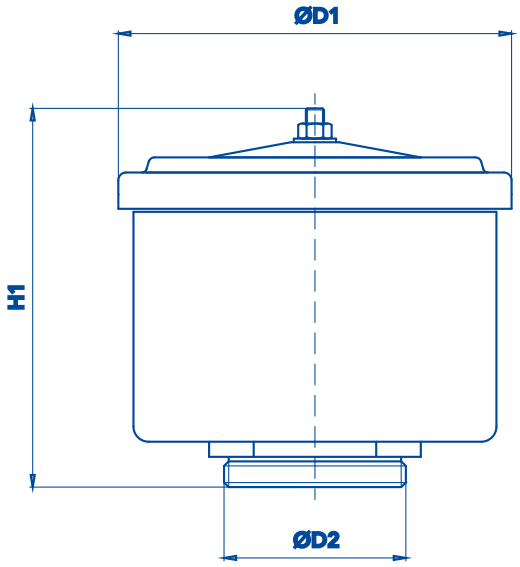

DIMENSIONS

	flow rate (l/min)	D1	D2	H1	KG
CBD11B16VD FA 4352.1	500	130	2" BSP	100	0,50
CBD12B16VD FA 4352.2	1.000	130	2" BSP	130	0,60
CBD13B16VD FA 4352.3	1.500	130	2" BSP	175	0,80

CBE-FA
AIR FILTERS



DESCRIPTION

Air breather, flange mounting

MATERIALS

Housing: Painted steel (black)

SPARE FILTER ELEMENT

VD - Velvet mesh
Filtration degree (in air) 10µm.
FD – Fibreglass (on request only)
Filtration degree (in air) 2,5µm.
CD – Impregnated cellulose (on request only)
Filtration degree (in air) 10µm.

COMPATIBILY (ISO 2943)

Full with fluids HH-HL-HM-HV-HTG (according to ISO 6743/4). For fluids different than the above mentioned, please contact our Customer Service.

WORKING TEMPERATURE

From -25°C to +110°C



HYDRAULIC DIAGRAM

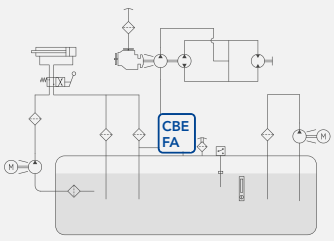

Is this datasheet the latest release? Please check on our website.

CBE-FA
AIR FILTERS

ORDERING AND OPTION CHART

C	B	E	COMPLETE FILTER FAMILY						FILTER ELEMENT FAMILY	E	B	E
			SIZE & LENGHT	11	12	21	22	23	SIZE & LENGHT			
		F	PORT TYPE									
			F = round flange	F	F	F	F	F				
			PORT SIZE									
			10 = hole ø 100 mm	10	-	-	-	-				
			12 = hole ø 125 mm	-	12	-	-	-				
			14 = hole ø 145 mm	-	-	14	-	-				
			16 = hole ø 165 mm	-	-	-	16	16				
			FILTER MEDIA						FILTER MEDIA			
			VD = velvet mesh	VD	VD	VD	VD	VD				
			FD = fibreglass	FD	FD	FD	FD	FD				
			CD = impregnated cellulose	CD	CD	CD	CD	CD				

INSTALLATION DRAWING

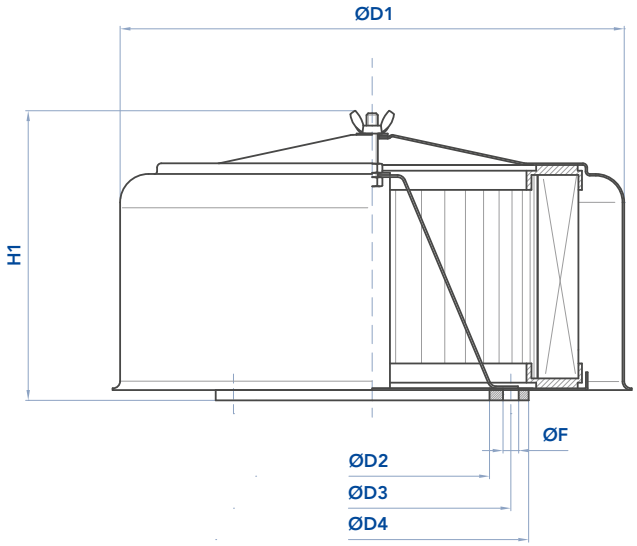

DIMENSIONS

	flow rate (l/min)	D1	D2	D3	D4	F	H1	Kg
CBE11F10VD FA 5528.1	6.000	292	100	130	160	8,5	120	2,50
CBE12F12VD FA 5528.2	9.000	292	125	155,5	180	11	145	2,80
CBE21F14VD FA 5554.1	12.000	354	145	175	200	11	160	2,50
CBE22F16VD FA 5554.2	15.000	354	165	195	220	11	190	3,00
BE23F16VD FA 5554.3	20.000	354	165	195	220	11	240	3,50

CBF-FA
AIR FILTERS



DESCRIPTION

Air breather, clamp mounting

MATERIALS

Housing: Painted steel (black)
Clamp: Stainless steel

SPARE FILTER ELEMENT

VD - Velvet mesh
Filtration degree (in air) 10µm.
FD – Fibreglass (on request only)
Filtration degree (in air) 2,5µm.
CD – Impregnated cellulose (on request only)
Filtration degree (in air) 10µm.

COMPATIBILY (ISO 2943)

Full with fluids HH-HL-HM-HV-HTG (according to ISO 6743/4).
For fluids different than the above mentioned, please contact our Customer Service.

WORKING TEMPERATURE

From -25°C to +110°C



HYDRAULIC DIAGRAM

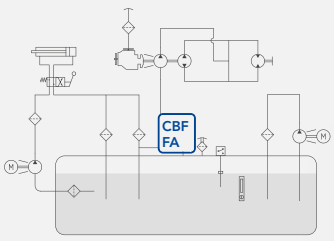

Is this datasheet the latest release? Please check on our website.

CBF-FA
AIR FILTERS



ORDERING AND OPTION CHART

C	B	F	COMPLETE FILTER FAMILY			FILTER ELEMENT FAMILY	E	B	F
			SIZE & LENGHT	11	21	SIZE & LENGHT			
		C	PORT TYPE						
			C = clamp	C	C				
			PORT SIZE						
			40 = hole ø 40 mm	40	-				
			52 = hole ø 52 mm	52	-				
			70 = hole ø 70 mm	-	70				
			76 = hole ø 76 mm	-	76				
			FILTER MEDIA			FILTER MEDIA			
			VD = velvet mesh	VD	VD				
			FD = fibreglass	FD	FD				
			CD = impregnated cellulose	CD	CD				

INSTALLATION DRAWING

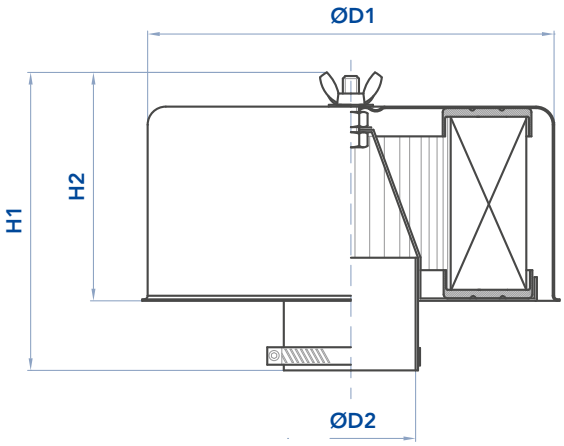

DIMENSIONS

	flow rate (l/min)	D1	D2	H1	H2	Kg
CBF11C40VD FA 6830.A	1.000	122	40	120	92	0,60
CBF11C52VD FA 6830.B	1.500	122	52	120	92	0,60
CBF21C70VD FA 6830.C	3.000	220	70	145	125	1,60
CBF21C76VD FA 6830.D	4.000	220	76	145	125	1,60

CBS-SAB
AIR FILTERS



DESCRIPTION

Tank connectors for air breathers with spin-on cartridge

MATERIALS

Connector: Steel (zinc plated for the flanged version)
Cartridge can: Steel

FILTER MEDIA

CC = Impregnated Cellulose
FD = fibreglass
Filtration degree (in air): 3µm

COMPATIBILY (ISO 2943)

Full with fluids HH - HL - HM - HR - HV - HG (according to ISO 6743/4). For fluids different than the above mentioned, please contact our Customer Service.

WORKING TEMPERATURE

From -25°C to +110°C



HYDRAULIC DIAGRAM

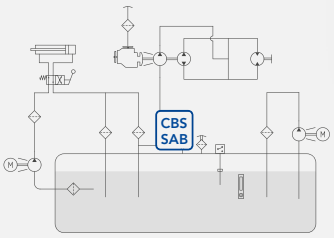

Is this datasheet the latest release? Please check on our website.

CBS-SAB
AIR FILTERS

ORDERING AND OPTION CHART

C	B	S	COMPLETE FILTER FAMILY					FILTER ELEMENT FAMILY	A	S	E
			SIZE & LENGHT	11	12	21	22	SIZE & LENGHT			
			CONNECTION TYPE								
			S = standard flange	S	S	S	S				
			W = welding connector	W	W	W	W				
		W	PRESSURIZATION VALVE								
			W = without	W	W	W	W				
			SEALS					SEALS			
			X = no seals (welding type)	X	X	X	X				
			C = sugheroil (flange type)	C	C	C	C				
			FILTER MEDIA					FILTER MEDIA			
			FD = fibreglass	FD	FD	FD	FD				
			CC = impregnated cellulose	CC	CC	CC	CC				

ORDERING AND OPTION CHART

S	A	B	COMPLETE FILTER FAMILY					FILTER ELEMENT FAMILY	C	C	A
			SIZE & LENGHT	151	152	301	302	SIZE & LENGHT			
			CONNECTION TYPE								
			S = flange	S	S	S	S				
			F = welding connector	F	F	F	F				
			FILTER MEDIA					FILTER MEDIA			
			CD = impregnated cellulose	CD	CD	CD	CD				
			FV = fibreglass	FV	FV	FV	FV				
				1	1	1	1	SEALS	1		

INSTALLATION DRAWING

WELDING CONNECTOR
DWG. A

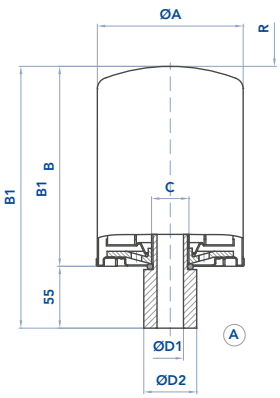

FLANGED CONNECTOR
DWG. B

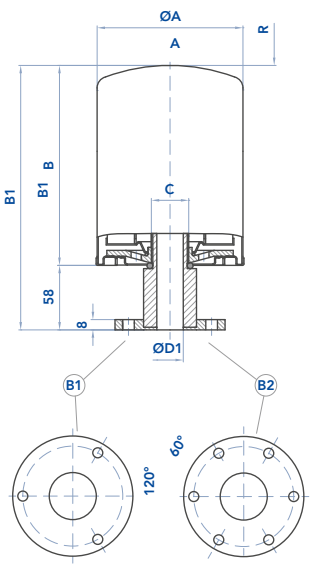

DIMENSIONS

	Dwg	flow rate (l/min)	A	B	B1	C	D1	D2	R
CBS11WWX SAB151S	A	1.800	96	146	201	3/4" BSP	18	32	40
CBS12WWX SAB152S	A	1.800	96	191	246	3/4" BSP	18	32	40
CBS21WWX SAB301S	A	2.800	129	181	236	1 1/4" BSP	32	48	40
CBS22WWX SAB302S	A	2.800	129	226	281	1 1/4" BSP	32	48	40
CBS11SWC SAB151F	B1	1.800	96	146	204	3/4" BSP	18	-	40
CBS12SWC SAB152F	B1	1.800	96	191	249	3/4" BSP	18	-	40
CBS21SWC SAB301F	B2	2.800	129	181	239	1 1/4" BSP	32	-	40
CBS22SWC SAB302F	B2	2.800	129	226	284	1 1/4" BSP	32	-	40

CSE-SBB
AIR FILTERS



DESCRIPTION

Air breathers with spin-on cartridge

MATERIALS

Connector: zinc plated steel
Basket: zinc plated steel
Cartridge can: steel

FILTER MEDIA

CC = Impregnated Cellulose
FD = fibreglass
Filtration degree (in air): 3µm

COMPATIBILY (ISO 2943)

Full with fluids HH - HL - HM - HR - HV - HG (according to ISO 6743/4). For fluids different than the above mentioned, please contact our Customer Service.

WORKING TEMPERATURE

From -25°C to +110°C



HYDRAULIC DIAGRAM

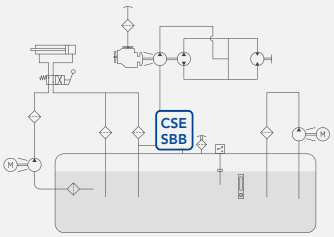

Is this datasheet the latest release? Please check on our website.

CSE-SBB
AIR FILTERS

ORDERING AND OPTION CHART

C	S	E	COMPLETE FILTER FAMILY					FILTER ELEMENT FAMILY	A	S	E
			SIZE & LENGHT	11	12	21	22	SIZE & LENGHT			
			CONNECTION TYPE								
			S = standard flange	S	S	S	S				
		W	PRESSURIZATION VALVE								
			W = without	W	W	W	W				
		C	SEALS					SEALS	C		
			C = sugheroil (flange type)	C	C	C	C				
			FILTER MEDIA					FILTER MEDIA			
			FD = fibreglass	FD	FD	FD	FD				
			CC = impregnated cellulose	CC	CC	CC	CC				

ORDERING AND OPTION CHART

S	B	B	COMPLETE FILTER FAMILY					FILTER ELEMENT FAMILY	C	C	A
			SIZE & LENGHT	151	152	301	302	SIZE & LENGHT			
			FILTER MEDIA					FILTER MEDIA			
			CD = impregnated cellulose	CD	CD	CD	CD				
			FV = fibreglass	FV	FV	FV	FV				
				1	1	1	1	SEALS	1		

INSTALLATION DRAWING

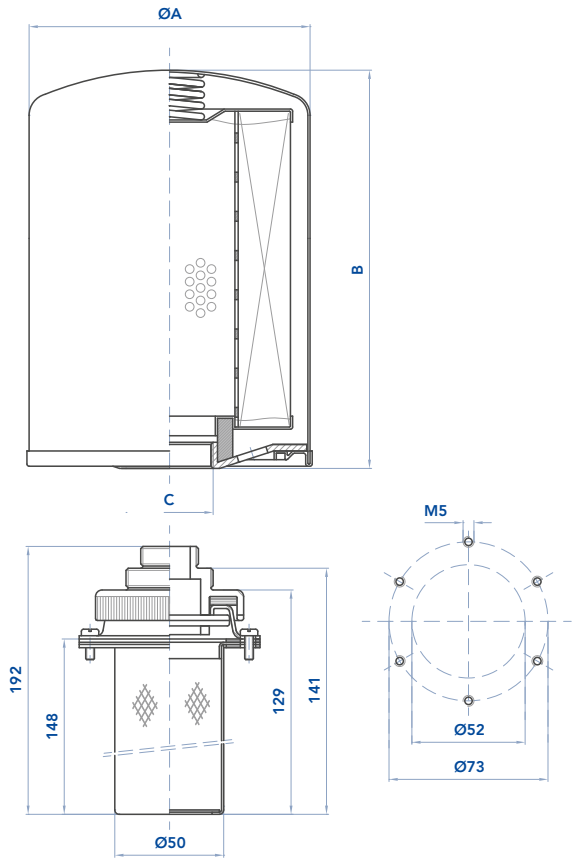

DIMENSIONS

	flow rate (l/min)	A	B	C
CSE11SWC SBB151	1.800	96	146	3/4" BSP
CSE12SWC SBB152	1.800	96	191	3/4" BSP
CSE21SWC SBB301	2.800	129	181	1 1/4" BSP
CSE22SWC SBB302	2.800	129	226	1 1/4" BSP

AIR SENTRY
AIR FILTERS

DESCRIPTION

Air dryer filter breathers

MATERIALS

D-10+ are manufactured from rugged ABS plastic and impact-modifi ed Plexiglas.
R-10+ have a rugged steel reinforced base for heavy duty applications

TECHNICAL DATA

Nominal air flow rate: 1.000 l/min
Solid contaminant filtration: 2µm
Silica gel adsorption: up to 40% of its weight in water

WORKING TEMPERATURE

From -30°C to +100°C

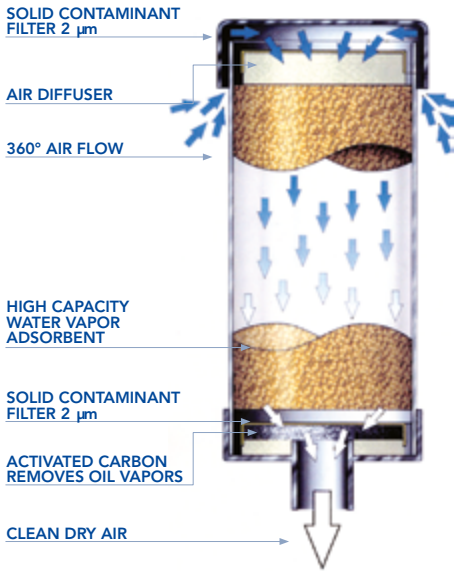



HYDRAULIC DIAGRAM

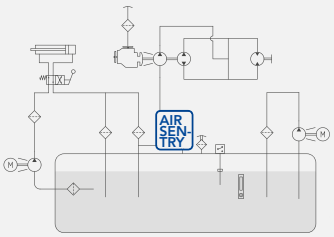

Is this datasheet the latest release? Please check on our website.



AIR SENTRY
AIR FILTERS

CONNECTION TO THE RESERVOIR

The breathers D10+ can be attached to the reservoir by using an adapter :
- mod. A-102 for mounting in a threaded hole 1”
- mod. A-104 for bayonet mounting on a standard flange pattern (6 holes on 73 mm PCD)

The breathers R10+ are attached to the re-servoir by 1” NPT male pipe thread.

Adapter A-102
threaded 1” NPT

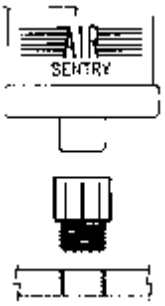

Adapter A-104
bayonet for
standard flange

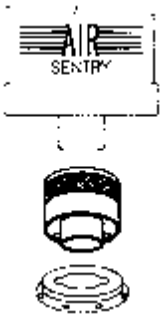

INSTALLATION DRAWING

Air Sentry Breathers use a three-stage filtration design to ensure optimum protection by removing water vapor and solid contaminants before they enter the fluid system.

First, air passes through a fine, 2µm solid particle filter. The air then passes through a diffuser to ensure maximum effectiveness within the silica gel chamber.

Next, water vapor is removed as the air travels through a bed of silica gel, the highest capacity adsorbent available. After being dried, the air passes through a second 2µm solid particle filter and enter the reservoir, clean and dry.

Air entering is cleaned and dried. Expelled air partially regenerates the silica gel and backflushes the particulate filter to prolong the life of the breather.

Silica gel is chemically inert, non-toxic, non-deliquescent and non-corrosive. The internal structure is composed of inerconnected microscopic pores that adsorb up to 40% of its weight.

When maximum adsorption is reached, the silica gel turns from yellow to blue to indicate that replacement of the breather is required.

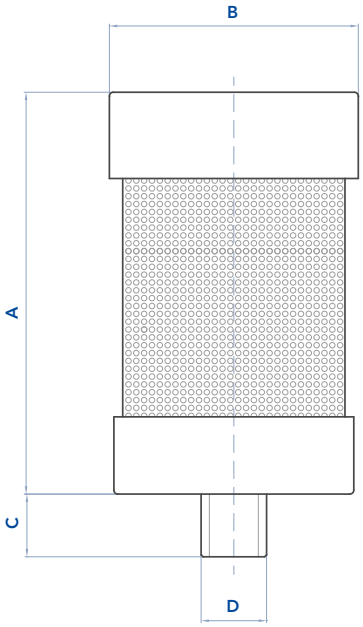

DIMENSIONS

	A	B	C	D	Kg	Max H_20 capacity (l)
D-101	127	127	32	to fit an adaptor A-10+	1,0	0,2
D-102	205	127	32	1 to fit an adaptor A-10+ 8	1,7	0,5
R-101	140	132	25	1"NPT	1,5	0,2
R-102	216	132	25	1"NPT	2,1	0,5





ACCESSORIES

COMPREHENSIVE CHOICE, HIGH QUALITY STANDARD

Application:
UFI hydraulic accessories programme has been carefully designed to offer a range of components suited to the demands of building hydraulic systems in most industrial and mobile applications.
Whether you require simple filler breathers or precise electrical level switches, the accessories range should provide you with the choice you need.

User Benefits:

- Tank breather filters for the filtration of the incoming air to the tanks of hydraulic systems
- Tank filler and breather filter for the filtration of the incoming air to the tanks of hydraulic systems and for filling the oil on the hydraulic tank
- Filler caps for filling oil in the hydraulic tanks
- Visual and electrical level indicators of fluid for hydraulic tank
- Oil bath air filters for prolonged use in particularly dusty environments, to ensure an excellent level of filtering and a long working life. For very dusty environments can be provided with cyclone prefiltering

CFA-TM
ACCESSORIES

DESCRIPTION

Filling breathers

FILLING BREATHERS

Filling plugs with inbuilt air breather; flanged tank connection with standard dimensions; protection basket against ingression of coarse parts (removable for CFA23); zinc plated steel body and chrome plated steel cap; seals by cork (NBR - Nitrile for pressurized version only).

FILTER ELEMENT

Filter element (not replaceable):
Impregnated cellulose 3µm (filtration degree in air)
Polyurathan foam 10µm (filtration degree in air)

For sizes CFA21 & CFA22 only the plug has a safety chain.



HYDRAULIC DIAGRAM

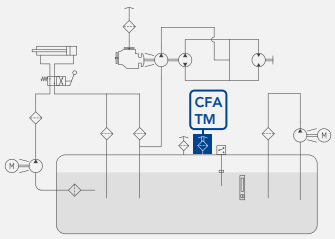

Is this datasheet the latest release? Please check on our website.

CFA-TM
ACCESSORIES



ORDERING AND OPTION CHART

C	F	A					
			SIZE & LENGHT	11	21	22	23
		S	MOUNTING PATTERN				
			S = DIN 24557/2 flange	S	S	S	S
			PRESSURIZATION VALVE				
			W = without	W	W	W	W
			A = 0,35 bar	-	A	A	-
			SEALS				
			C = sugheroil	C	C	C	C
			N = NBR Nitrile (with A option only)	-	N	N	-
			FILTER MEDIA				
			CC = impregnated cellulose	CC	CC	CC	CC
			PE = polyurathan foam	PE	PE	PE	PE
		P	ACCESSORIES				
			P = padlock holder	-	P	P	-

DIMENSIONS

	filtr. µm	flow rate (l/min)	D1	D2	D3	D4	Holes n°	D5	D6	H1	H2
CFA11SWCCC TM150G65	3	150	47	29	52	M5	3	31	41	48	64
CFA11SWCPE TM450G65	10	300	47	29	52	M5	3	31	41	48	64
CFA21SWCCC TM178G78	3	450	80	50	83	M5	6	52	73	57	78
CFA21SWCPE TM478G78	10	750	80	50	83	M5	6	52	73	57	78
CFA22SWCCC TM178G150	3	450	80	50	83	M5	6	52	73	57	148
CFA22SWCPE TM478G150	10	750	80	50	83	M5	6	52	73	57	148
CFA23SWCCC TM178G100	3	450	80	40	83	M5	6	42	73	57	100
CFA23SWCPE TM478G100	10	750	80	40	83	M5	6	42	73	57	100

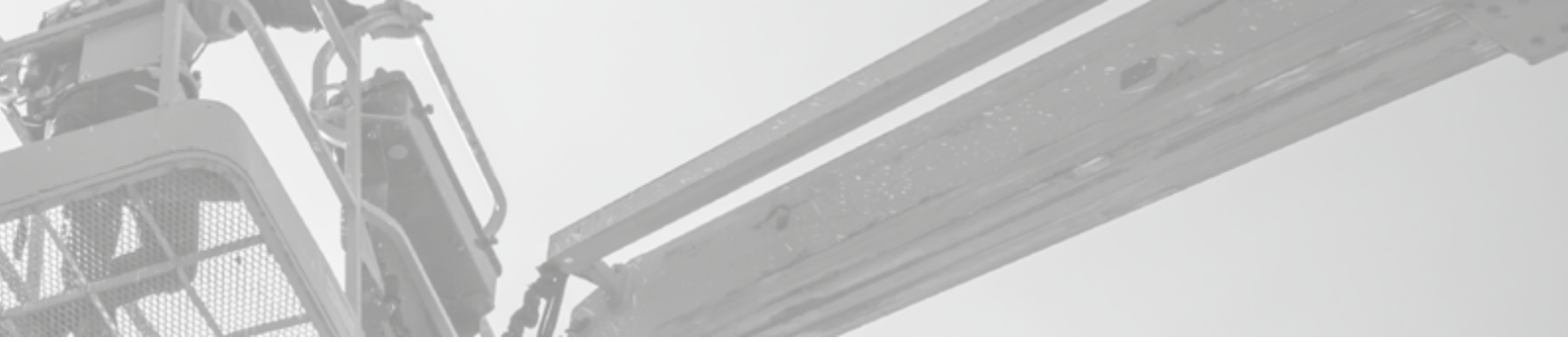

INSTALLATION DRAWING

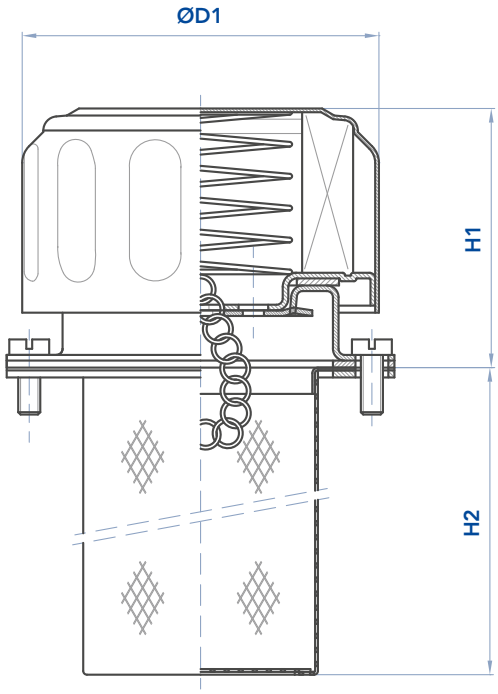

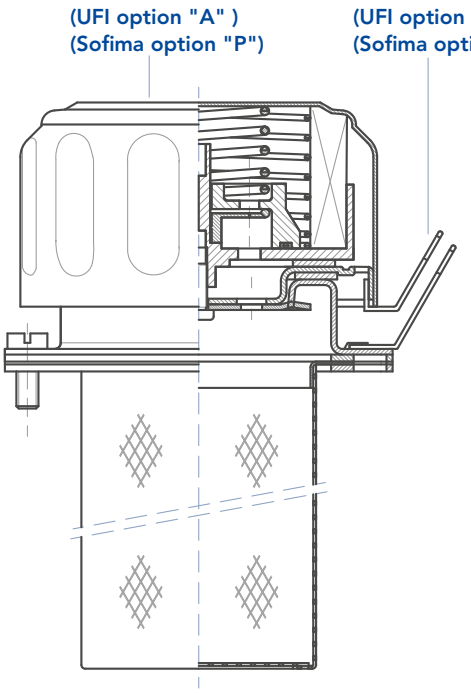

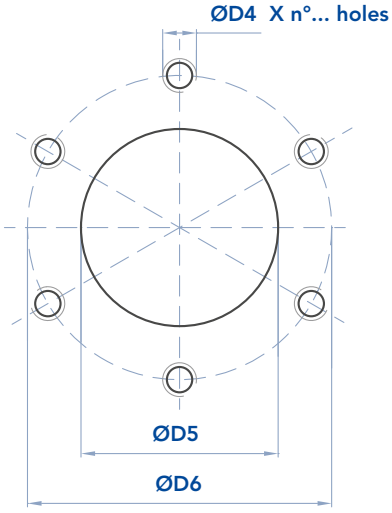

Tank connection:
DIN 24557/2



CLA-LS
ACCESSORIES



DESCRIPTION

Visual level indicators

MATERIALS

Transparent part: Trogamid T
Anti-shock protection: Painted steel
Fixing bolts: zinc plated steel
Seals: NBR Nitrile
(FKM - on request fluoroelastomer)

Double scale thermometer
(Celsius and Farenheit) option available.
Tightening torque for the fixing bolts 10 Nm

PRESSURE

Max pressure allowed 100 kPa (1 bar)

WORKING TEMPERATURE

From -20°C to +90°C



HYDRAULIC DIAGRAM

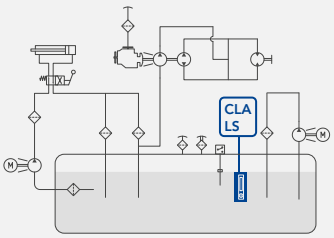

Is this datasheet the latest release? Please check on our website.

CLA-LS
ACCESSORIES



ORDERING AND OPTION CHART

C	L	A				
			COMPLETE FILTER FAMILY			
			SIZE & LENGHT	11	12	13
		M	CONNECTION TYPE			
			M = metric thread	M	M	M
			CONNECTION SIZE			
			10 = M10	10	10	-
			12 = M12	12	12	12
		N	SEALS			
			N = NBR Nitrile	N	N	N
			ACCESSORIES			
			W = without	W	W	W
			T = with thermometer	T	T	T

DIMENSIONS

	H1	H2	H3	D
CLA11M10NW LS0761WM10	108	76	32	M10
CLA11M10NT LS0761TM10	108	76	32	M10
CLA12M12NW LS1271WM12	160	127	78	M12
CLA12M12NT LS1271TM12	160	127	78	M12
CLA13M12NW LS2541WM12	286	254	202	M12
CLA13M12NT LS2541TM12	286	254	202	M12

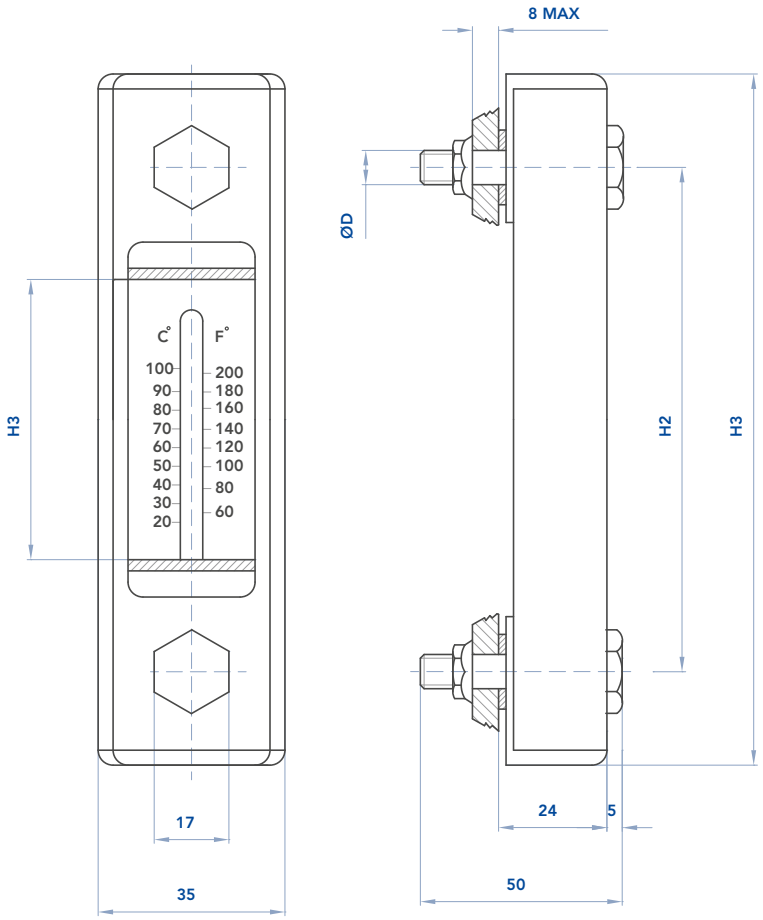

CLB-LME
ACCESSORIES

DESCRIPTION

Float switches

FLOAT SWITCHES

Electrical level indicators, an electrical signal is activated when the minimum (or maximum) oil level is reached. The REED switch has SPDT contacts.

N.B. the float switch must be mounted at min 50 mm from ferrous walls. Max oil viscosity 150 cSt.



MATERIALS

Tank connection: Anodized aluminium
Rod: Stainless steel
Float: Polyammide

COMPATIBILITY (ISO 2943)

Full with fluids HH-HL-HM-HV-HTG (according to ISO 6743/4). For fluids different than the above mentioned, please contact our Customer Service.

WORKING TEMPERATURE

From -10°C to +90°C

HYDRAULIC DIAGRAM

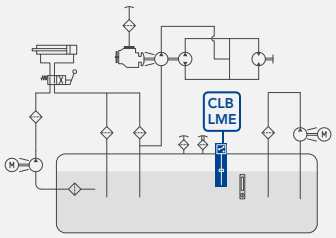

Is this datasheet the latest release? Please check on our website.

CLB-LME
ACCESSORIES

ORDERING AND OPTION CHART

C	L	B	COMPLETE FILTER FAMILY						
			SIZE & LENGHT	15	20	25	35	40	50
		U	CONNECTION TYPE						
			U = universal, BSP+2-3 holes flange	U	U	U	U	U	U
		N	SEALS						
			N = NBR Nitrile	N	N	N	N	N	N
		W	ACCESSORIES						
			W = without	W	W	W	W	W	W

DIMENSIONS

	L
CLB15UNW LME150B5F	150
CLB20UNW LME200B5F	200
CLB25UNW LME250B5F	250
CLB35UNW LME350B5F	350
CLB40UNW LME400B5F	400
CLB50UNW LME500B5F	500

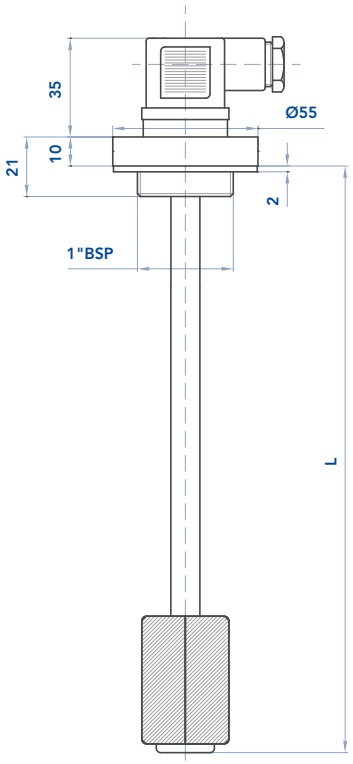

ELECTRICAL DATA

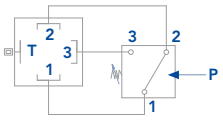

1=COMMON
2=N.C.
3=N.O.

SPDT Reed switch
Max load AC up to 48V-0,5A
Max load DC up to 48V-0,5 A

Connector DIN 43650

Protection DIN 40050: IP65

Tank mounting pattern possibilities:

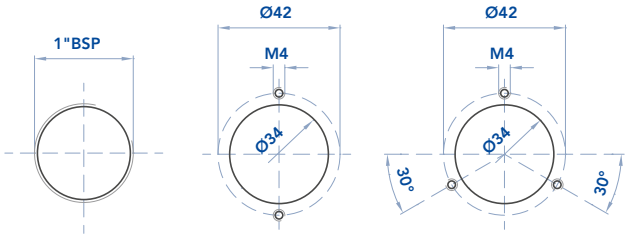

FAB
ACCESSORIES



DESCRIPTION

Oil bath air filter and cyclone prefilter
Ports: ø 57 - 65 - 93 - 114
Flow rate: 3.000 to 12.000 l/min

MATERIALS

Housing: black painted steel
Internal parts: steel
Filter element: zinc painted steel
(stainless steel on request)
Prefilter transparent housing and buffle: plastic material
Seals: NBR

WORKING TEMPERATURE

Max working temperature: 95°C



HYDRAULIC DIAGRAM

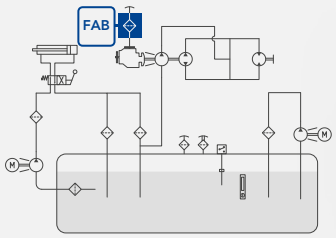

Is this datasheet the latest release? Please check on our website.

FAB
ACCESSORIES

SIZING INSTRUCTIONS

$$Q = \frac{C \cdot N}{K}$$

Q (lt/min) = Flow rate
C (lt) = Total displacement
N = RPM
K = Coefficient

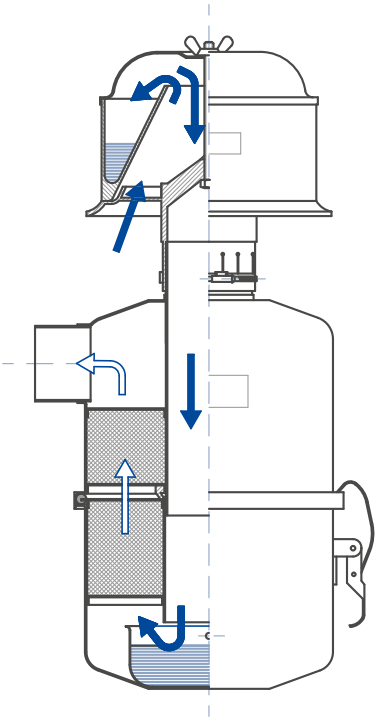

K - coefficient for engines

Cylinders	2 Strokes	4 Strokes
1	K = 0,42	K = 0,52
2	K = 0,83	K = 1
3	K = 0,83	K = 1,6
4 ÷ 8	K = 0,83	K = 2

K - coefficient for compressors

Cylinders	K
1	K = 1,2
2	K = 2,4

DIMENSIONAL LAYOUT

Filter	l/min	D1	D2	H1	H2	H3	H4	H5	H6	H7	L	Weight Kg
6000.6	3000	57	164	293	252	129	123	41	201	92	116	2,5
6000.7	4000	57	164	348	307	156	151	41	260	88	116	3,9
6000.8	5500	65	187	385	334	172	162	51	273	112	131	4,5
6000.9	8000	93	266	451	397	209	188	54	321	130	182	7,5
6000.10	10000	93	266	529	475	246	229	54	399	130	179	9,5
6000.11	12000	114	322	558	503	262	241	55	412	146	210	13,5

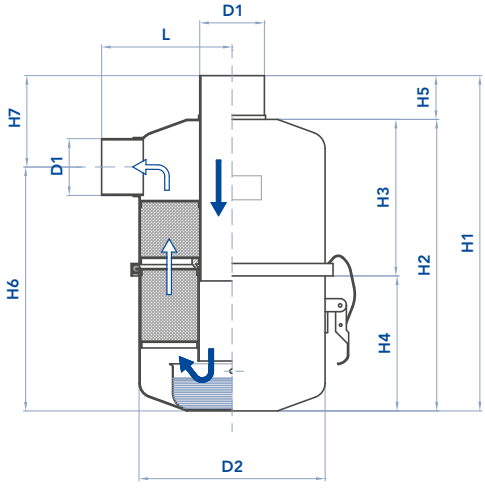



CYCLONE PREFILTER

Pre-filter	For filter	l/min	D1	D2	H1	H2	H3	Weight Kg
6025.4	6000.6 - 6000.7	4000	57	140	175	115	60	0,4
6025.5	6000.8	6000	65	154	185	115	70	0,6
6025.6	6000.9 - 6000.10	10000	93	222	235	175	60	1,15
6025.6S2	-	11000	102	222	235	175	60	1,13
6025.7	6000.11	12000	114	222	235	175	60	1,1

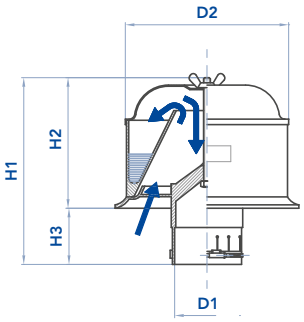

SPARE FILTER ELEMENT

Filter	For filter	D1	D2	H1
5702.6	6000.6	161	60	70
5702.7	6000.7	161	60	105
5702.8	6000.8	184	68	105
5702.9	6000.9	262	96	120
5702.10	6000.10	262	96	170
5702.11	6000.11	318	117	185

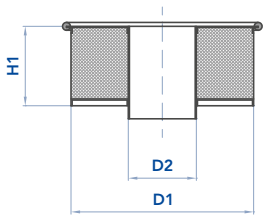

CLOGGING INDICATORS



THE IMPORTANCE OF GETTING THE TIMING RIGHT

Application:
The most economic change-out time for the filter-element requires a mechanism to monitor the pressure of the hydraulic oil flowing through the filter, and one which alerts the user when this flow starts to diminish.
This is the most likely indication that the filter element contains excessive particulate contamination.
Both the visual clogging indicator and the electrical clogging indicator must be set to trigger a signal at a pressure lower than the setting of the integrated by-pass valve in the filter.

User Benefits:
- Lightweight and compact. Direct mounting to the filter-head.
- Sealed, robust casing to protect the electrical parts (IP69K). Resistant to adverse environmental conditions (ISO 15003).
- Reliable signal prior to by-pass operation ensures timely filter-element replacement and avoidance of potential system contamination.

PRESSURE FILTERS
CLOGGING INDICATORS



INDICATOR SERIE		DESCRIPTION	FOR PRESSURE FILTERS SERIES		
NBR	**FKM**	**Pressure gauge**			
31	-	Scale 0÷12 bar (0÷1,2 MPa)	FPE - FPH AMF - TLM	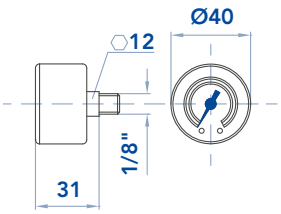	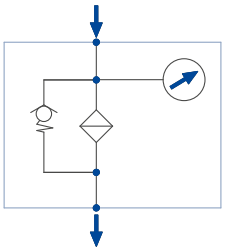
NBR	**FKM**	**Pressure gauge stainless steel, glycerine filled**			
36	-	Scale 0÷12 bar (0÷1,2 MPa)	FPE - FPH AMF - TLM	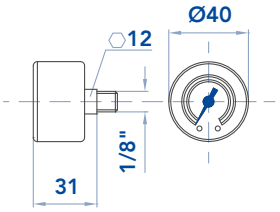	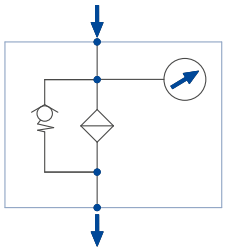
NBR	**FKM**	**Pressure switch**			**ATEX 3 GD EEx e T6**
P1	-	Setting 1,5 bar (150 kPa)	FPE - FPH AMF - TLM	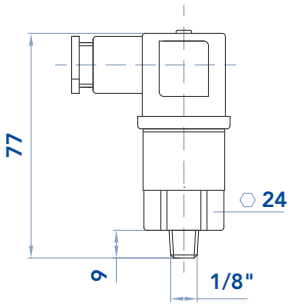	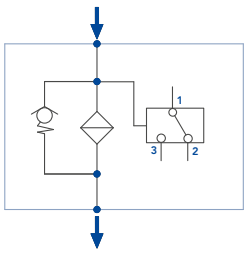
		SPDT, Max voltage 250V - 50 Hz - Max current 6 A resistive, 1 A inductive - Protection IP65 connector DIN 43650			

PRESSURE FILTERS
CLOGGING INDICATORS

INDICATOR SERIE		DESCRIPTION	FOR PRESSURE FILTERS SERIES
NBR	**FKM**	**Differential VISUAL ELECTRICAL indicator**	
N0	S0	Setting 1,3 bar (130 kPa)	for FPE A+, B+ for AMD 15+, 30+
		SPDT differential switch. C.C. 14 - 30 V: > max resistive or inductive load 4 - 3 A respectively C.A. 125-250 V: > max resistive or inductive load 1 A - Protection IP65 - Connector DIN 43650	

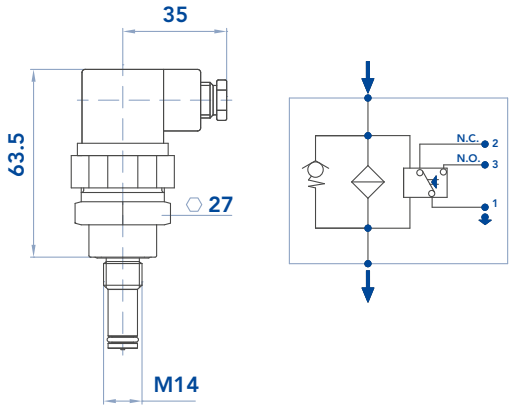

NBR	FKM	Differential VISUAL indicator	
U0	W0	Setting 1,3 bar (130 kPa)	for FPE A+, B+ for AMD 15+, 30+

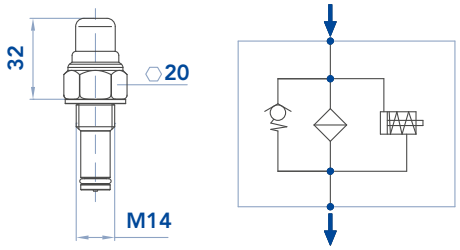

NBR	FKM	Differential VISUAL indicators	
5B	AB	Setting 1,3 bar (130 kPa)	FPH TLM
5D	AD	Setting 2,5 bar (250 kPa)	FPA - FPB - FPD - FPL - FPM MDM - MHT - MDF - SPP - SPM
5E	AE	Setting 5 bar (500 kPa)	FPA - FPB - FPC - FPD - FPL - FPM MDM - MHT - MGT- MDF - SPP - SPM
5F	AF	Setting 8 bar (800 kPa)	FPA - FPB - FPC - FPD - FPL - FPM MDM - MHT - MGT- MDF - SPP - SPM

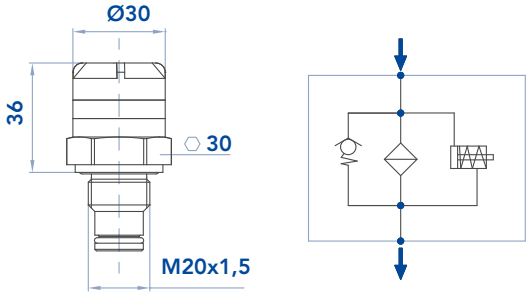



INDICATOR SERIE		DESCRIPTION	FOR PRESSURE FILTERS SERIES
NBR	**FKM**	**Differential ELECTRICAL indicators**	
6B	CB	Setting 1,3 bar (130 kPa)	FPH TLM
6D	CD	Setting 2,5 bar (250 kPa)	FPA - FPB - FPD - FPL - FPM MDM - MHT - MDF - SPP - SPM
6E	CE	Setting 5 bar (500 kPa)	FPA - FPB - FPC - FPD - FPL - FPM MDM - MHT - MGT- MDF - SPP - SPM
6F	CF	Setting 8 bar (800 kPa)	FPA - FPB - FPC - FPD - FPL - FPM MDM - MHT - MGT- MDF - SPP - SPM
		SPDT differential switch. C.C. 14 - 30 V: > max resistive or inductive load 4 - 3 A respectively C.A. 125-250 V: > max resistive or inductive load 1 A - Protection IP65 - Connector DIN 43650	

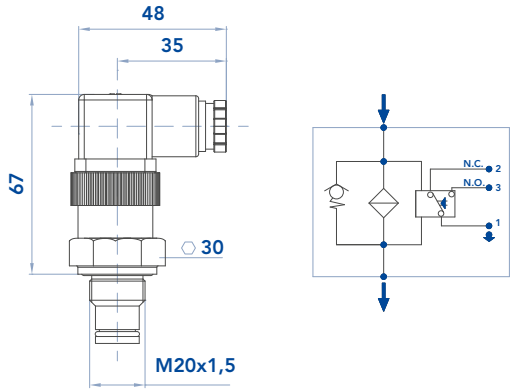

NBR	FKM	Differential ELECTRICAL indicators with LED (24 v) for visual indication	
7B	EB	Setting 1,3 bar (130 kPa)	FPH TLM
7D	ED	Setting 2,5 bar (250 kPa)	FPA - FPB - FPD - FPL - FPM MDM - MHT - MDF - SPP - SPM
7E	EE	Setting 5 bar (500 kPa)	FPA - FPB - FPC - FPD - FPL - FPM MDM - MHT - MGT- MDF - SPP - SPM
7F	EF	Setting 8 bar (800 kPa)	FPA - FPB - FPC - FPD - FPL - FPM MDM - MHT - MGT- MDF - SPP - SPM
		SPDT differential switch. C.C. 14 - 30 V: > max resistive or inductive load 4 - 3 A respectively C.A. 125-250 V: > max resistive or inductive load 1 A - Protection IP65 - Connector DIN 43650	

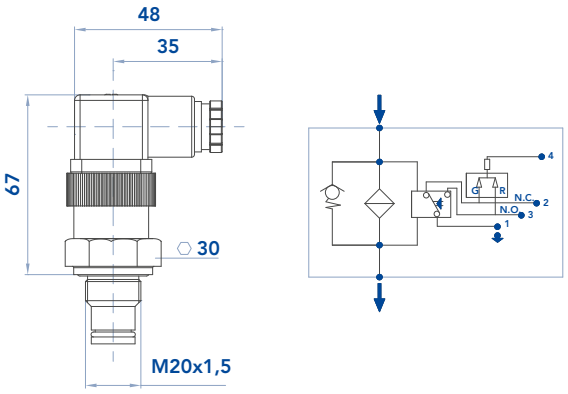

NBR	FKM	Differential ELECTRICAL indicators with THERMOSTAT 30° C	
T0	DB	Setting 1,3 bar (130 kPa)	FPH TLM
T2	DE	Setting 5 bar (500kPa)	FPA - FPB - FPC - FPD - FPL - FPM MDM - MHT - MDF - SPP - SPM
T3	DF	Setting 8 bar (800 kPa)	FPA - FPB - FPC - FPD - FPL - FPM MDM - MHT - MGT- MDF - SPP - SPM
T6	DD	Setting 2,5 bar (250 kPa)	FPA - FPB - FPD - FPL - FPM MDM - MHT - MDF - SPP - SPM
		SPDT differential switch. C.C. 14 - 30 V: > max resistive or inductive load 4 - 3 A respectively C.A. 125-250 V: > max resistive or inductive load 1 A - Protection IP65 - Connector DIN 43650	

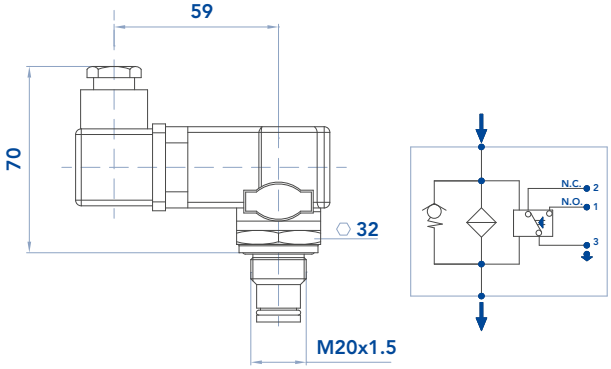

PRESSURE FILTERS
CLOGGING INDICATORS

INDICATOR SERIE		DESCRIPTION	FOR PRESSURE FILTERS SERIES
NBR	**FKM**	**Differential VISUAL ELECTRICAL indicators**	
70	E0	Setting 1,3 bar (130 kPa)	FPH TLM
76	E6	Setting 2,5 bar (250kPa)	FPA - FPB - FPD - FPL - FPM MDM - MHT - MDF - SPP - SPM
72	E2	Setting 5 bar (500 kPa)	FPA - FPB - FPC - FPD - FPL - FPM MDM - MHT - MGT- MDF - SPP - SPM
73	E3	Setting 8 bar (800 kPa)	FPA - FPB - FPC - FPD - FPL - FPM MDM - MHT - MGT- MDF - SPP - SPM
		SPDT differential switch. C.C. 14 - 30 V: > max resistive or inductive load 4 - 3 A respectively C.A. 125-250 V: > max resistive or inductive load 1 A - Protection IP65 - Connector DIN 43650	

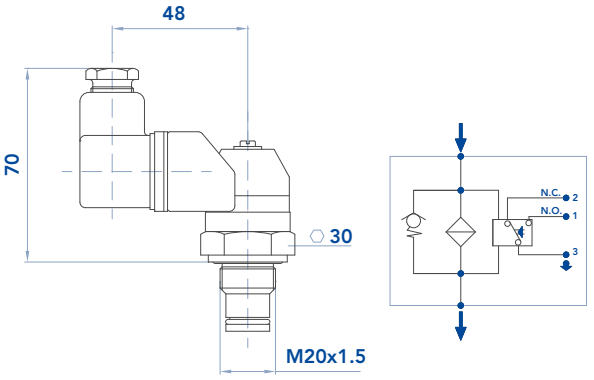

NBR	FKM	Differential ELECTRICAL indicators VANDAL PROOF	
M2	-	Setting 5 bar (500 kPa)	FPA - FPB - FPC - FPD - FPL - FPM MDM - MHT - MGT- MDF - SPP - SPM
M3	-	Setting 8 bar (800kPa)	FPA - FPB - FPC - FPD - FPL - FPM MDM - MHT - MGT- MDF - SPP - SPM
M6	-	Setting 2,5 bar (250 kPa)	FPA - FPB - FPD - FPL - FPM MDM - MHT - MDF - SPP - SPM
		SPDT differential switch. C.C. 14 - 30 V: > max resistive or inductive load 4 - 3 A respectively C.A. 125-250 V: > max resistive or inductive load 1 A - Protection IP65 - Connector DIN 43650	

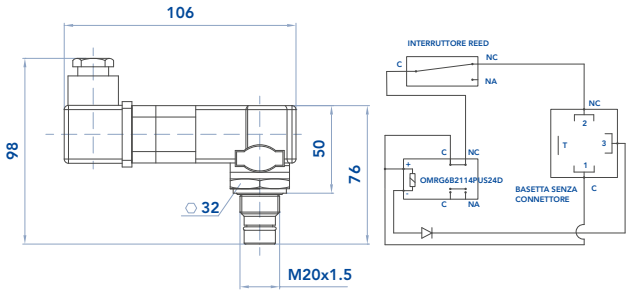

NBR	FKM	Differential ELECTRICAL indicators ATEX	
008.0239.2	-	Setting 1,3 bar (130 kPa)	FPA - FPB - FPD - FPL - FPM MDM - MHT - MDF - SPP - SPM
008.0240.2	-	Setting 2,5 bar (250kPa)	FPA - FPB - FPD - FPL - FPM MDM - MHT - MDF - SPP - SPM
008.0235.2	-	Setting 5 bar (500 kPa)	FPA - FPB - FPC - FPD - FPL - FPM MDM - MHT - MGT- MDF - SPP - SPM
008.0212.2	-	Setting 8 bar (800 kPa)	FPA - FPB - FPC - FPD - FPL - FPM MDM - MHT - MGT- MDF - SPP - SPM
		SPDT differential switch. C.C. 14 - 30 V: > max resistive or inductive load 4 - 3 A respectively C.A. 125-250 V: > max resistive or inductive load 1 A - Protection IP65 - Connector DIN 43650	

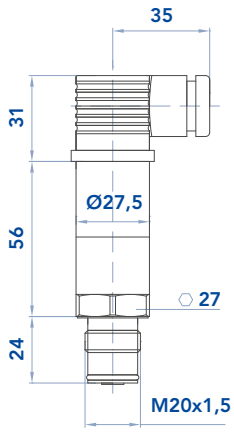

ATEX 3 GD EEx e T6

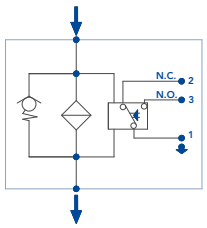

RETURN FILTERS
CLOGGING INDICATORS



INDICATOR SERIE		DESCRIPTION	FOR RETURN FILTERS SERIES
NBR	**FKM**	**Pressure gauge**	
30	-	Scale 0÷6 bar (0÷600 kPa)	FRA - FRB - FRC - FRF - FRH RFM - RFA - MAR - RFC

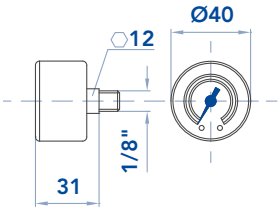

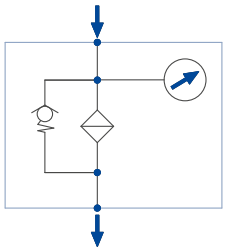

NBR	FKM	Pressure gauge	
32	-	Scale 0÷6 bar (0÷600 kPa)	FRA - FRB - FRC - FRF - FRH RFM - RFA - MAR - RFC

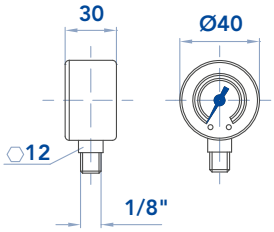

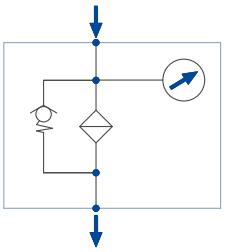

NBR	FKM	Pressure switch	
P1	-	Setting 1,5 bar (150 kPa)-SPDT	FRA - FRB - FRC - FRH RFM - RFA - MAR
P2	-	Setting 3 bar (300 kPa)-SPDT	FRF (special version, without bypass valve) RFC (special version, without bypass valve)
P4	-	Setting 1,3 bar (130 kPa)-SPDT	FRF RFC
P6	-	Setting 2 bar (200 kPa)-SPDT	FRB RFA

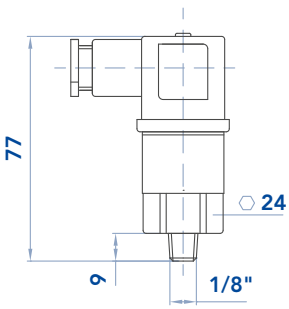

ATEX 3 GD EEx e T6

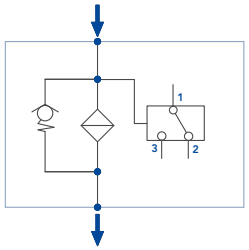



RETURN FILTERS
CLOGGING INDICATORS

INDICATOR SERIE		DESCRIPTION	FOR RETURN FILTERS SERIES
NBR	**FKM**	**Differential VISUAL indicators**	
5B	AB	Setting 1,3 bar (130 kPa)	FRF RFC
5C	AC	Setting 2 bar (200 kPa)	FRD MRH
		SPDT differential switch. C.C. 14 - 30 V: > max resistive or inductive load 4 - 3 A respectively C.A. 125-250 V: > max resistive or inductive load 1 A - Protection IP65 - Connector DIN 43650	

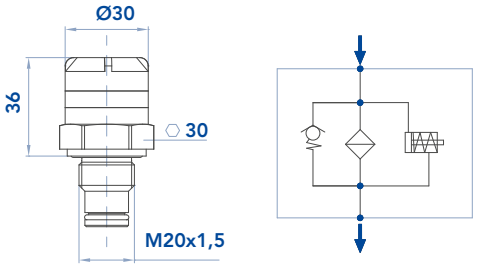

NBR	FKM	Differential ELECTRICAL indicators	
6B	CB	Setting 1,3 bar (130 kPa)	FRF RFC
6C	CC	Setting 2 bar (200 kPa)	FRD MRH
		SPDT differential switch. C.C. 14 - 30 V: > max resistive or inductive load 4 - 3 A respectively C.A. 125-250 V: > max resistive or inductive load 1 A - Protection IP65 - Connector DIN 43650	

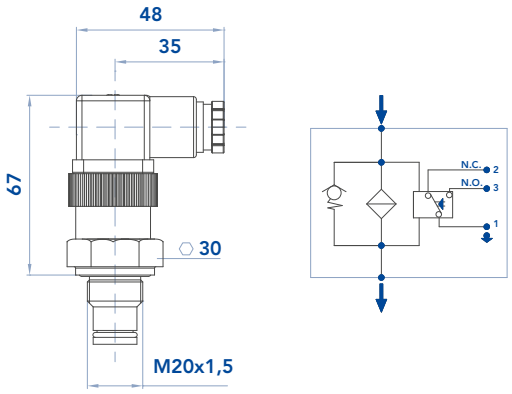

NBR	FKM	Differential ELECTRICAL indicators with LED (24 v) for visual indication	
7B	EB	Setting 1,3 bar (130 kPa)	FRF RFC
7C	EC	Setting 2 bar (200 kPa)	FRD MRH
		SPDT differential switch. C.C. 14 - 30 V: > max resistive or inductive load 4 - 3 A respectively C.A. 125-250 V: > max resistive or inductive load 1 A - Protection IP65 - Connector DIN 43650	

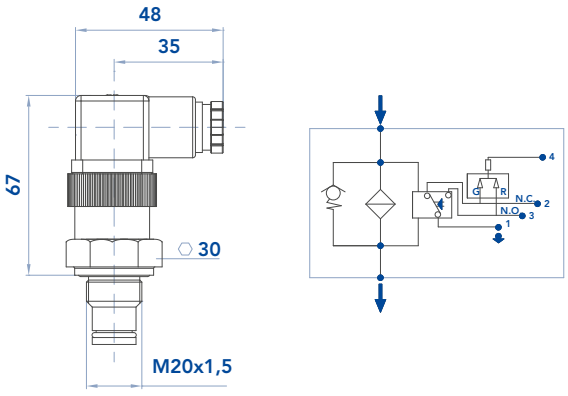



INDICATOR SERIE		DESCRIPTION	FOR RETURN FILTERS SERIES
NBR	**FKM**	**Differential ELECTRICAL indicators with THERMOSTAT 30° C**	
T0	DB	Setting 1,3 bar (130 kPa)	FRF RFC
T1	DC	Setting 2 bar (200 kPa)	FRD MRH
		SPDT differential switch. C.C. 14 - 30 V: > max resistive or inductive load 4 - 3 A respectively C.A. 125-250 V: > max resistive or inductive load 1 A - Protection IP65 - Connector DIN 43650	

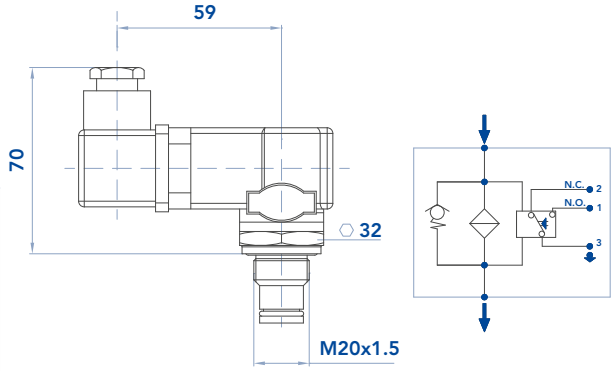

NBR	**FKM**	**Differential VISUAL ELECTRICAL indicators**	
70	E0	Setting 1,3 bar (130 kPa)	FRF RFC
71	E1	Setting 2 bar (200 kPa)	FRD MRH
		SPDT differential switch. C.C. 14 - 30 V: > max resistive or inductive load 4 - 3 A respectively C.A. 125-250 V: > max resistive or inductive load 1 A - Protection IP65 - Connector DIN 43650	

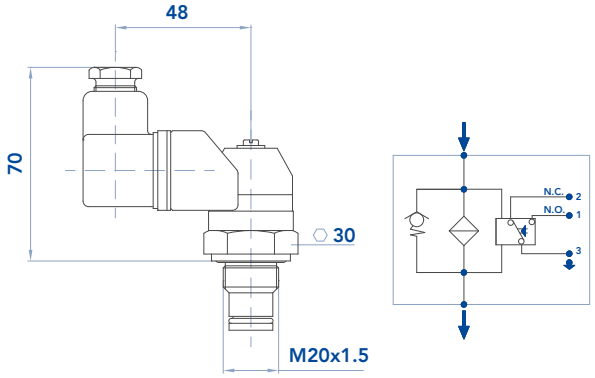

NBR	**FKM**	**Differential ELECTRICAL indicators ATEX**	
008.0239.2	-	Setting 1,3 bar (130 kPa)	FRF RFC
008.0234.2	-	Setting 2 bar (200 kPa)	FRD MRH
		SPDT differential switch. C.C. 14 - 30 V: > max resistive or inductive load 4 - 3 A respectively C.A. 125-250 V: > max resistive or inductive load 1 A - Protection IP65 - Connector DIN 43650	

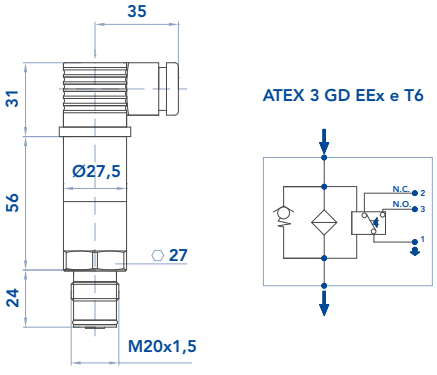

OFF-LINE FILTERS
CLOGGING INDICATORS



INDICATOR SERIE		DESCRIPTION	FOR OFF-LINE FILTERS SERIES	
NBR	**FKM**	**Differential VISUAL indicators**		
5B	AB	Setting 1,3 bar (130 kPa)	FOF - UOW ROL - GTC	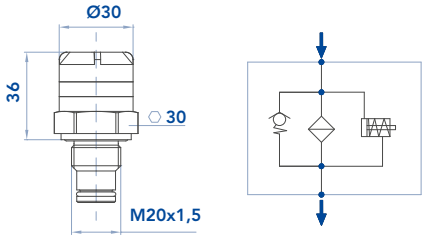
NBR	**FKM**	**Differential ELECTRICAL indicators**		
6B	CB	Setting 1,3 bar (130 kPa)	FOF - UOW ROL - GTC	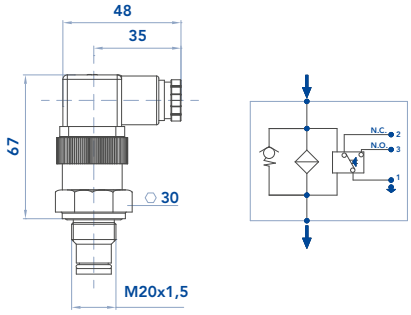
		SPDT differential switch. C.C. 14 - 30 V: > max resistive or inductive load 4 - 3 A respectively C.A. 125-250 V: > max resistive or inductive load 1 A - Protection IP65 - Connector DIN 43650		
NBR	**FKM**	**Differential ELECTRICAL indicators with LED (24 v) for visual indication**		
7B	EB	Setting 1,3 bar (130 kPa)	FOF - UOW ROL - GTC	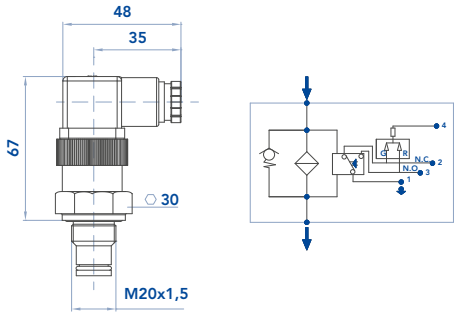
		SPDT differential switch. C.C. 14 - 30 V: > max resistive or inductive load 4 - 3 A respectively C.A. 125-250 V: > max resistive or inductive load 1 A - Protection IP65 - Connector DIN 43650		



INDICATOR SERIE		DESCRIPTION	FOR OFF-LINE FILTERS SERIES
NBR	**FKM**	**Differential ELECTRICAL indicators with THERMOSTAT 30° C**	
T0	DB	Setting 1,3 bar (130 kPa)	FOF - UOW ROL - GTC
		SPDT differential switch. C.C. 14 - 30 V: > max resistive or inductive load 4 - 3 A respectively C.A. 125-250 V: > max resistive or inductive load 1 A - Protection IP65 - Connector DIN 43650	
NBR	**FKM**	**Differential VISUAL ELECTRICAL indicators**	
70	E0	Setting 1,3 bar (130 kPa)	FOF - UOW ROL - GTC
		SPDT differential switch. C.C. 14 - 30 V: > max resistive or inductive load 4 - 3 A respectively C.A. 125-250 V: > max resistive or inductive load 1 A - Protection IP65 - Connector DIN 43650	
NBR	**FKM**	**Differential ELECTRICAL indicators ATEX**	
008.0239.2	-	Setting 1,3 bar (130 kPa)	FOF - UOW ROL - GTC
		SPDT differential switch. C.C. 14 - 30 V: > max resistive or inductive load 4 - 3 A respectively C.A. 125-250 V: > max resistive or inductive load 1 A - Protection IP65 - Connector DIN 43650	

SUCTION FILTERS
CLOGGING INDICATORS



INDICATOR SERIE		DESCRIPTION	FOR SUCTION FILTERS SERIES		
NBR	FKM				
10	-	Vacuum gauge	FSC - FSD - FSE FSB - MSE - AMF	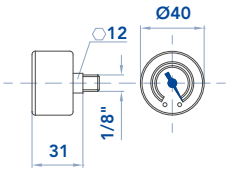	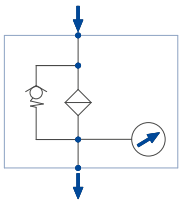
NBR	FKM				
11	-	Vacuum gauge	FSC - FSD FSB - MSE	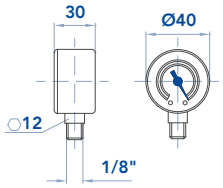	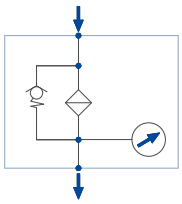
NBR	FKM	DIFFERENTIAL ELECTRICAL INDICATORSWITH LED (24V) FOR VISUAL INDICATION			
91	-	"Vacuum switch Setting 0,2 bar (20 kPa) SPDT"	FSC - FSD - FSE FSB - MSE - AMF	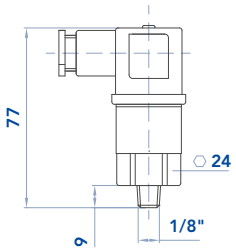	ATEX 3 GD EEx e T6 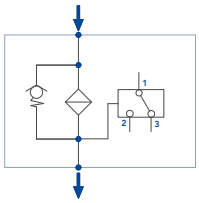
		SPDT, Max voltage 250V - 50 Hz - Max current 6 A resistive, 1 A inductive - Protection IP65 connector DIN 43650			

FILTRATION IN BRIEF



FILTRATION IN BRIEF

Contamination Control in the hydraulic system is a very wide and complex matter; the following is just a short summary.
Our Customer Service is at your disposal for any further information.
The function of the fluid in the hydraulic systems is transmitting forces and motion.
In view of a reliable and efficient operation of the system, it is very important to select the fluid considering the requirements of the system and the specific working conditions (working pressure, environment temperature, location of the system, etc.).
Depending on the required features (viscosity, lubricant capacity, anti-wear protection, density, resistance to ageing and to thermal variances, materials compatibility, etc.), the proper oil can be selected among a number of mineral oils (the most popular), synthetic fluids, water based fluids, environmental friendly fluids, etc.
All the hydraulic fluids are classified according to international standards.
Solid contamination is recognized as the main reason for malfunction, failures and early decay in hydraulic systems; it is impossible to eliminate completely it, but it can be well kept under control with proper devices (filters).
No matter which fluid is used, it must be kept at the contamination level required by the most sensitive component used on the system.

HOW THE CONTAMINATION IS MEASURED

The contamination level is measured by counting the number of particles of a certain dimension per unit of volume of the fluid; this number is then classified in Contamination Classes, according to international standards.
Measuring is made with Automatic Particle Counters that can make the analysis on line (through sampling connectors put on the system for this purpose) or from sampling bottles.
The calculations and sampling of the fluid must be done according to the specific ISO norms, to attest their validity.
The most popular standard for Contamination Classes in the hydraulic systems is ISO 4406; the standard NAS 1638 (under revision) is also quite used.

CONTAMINATION CLASSES ACCORDING TO ISO 4406

The Contamination Class according to this standard is described by 3 numbers indicating the number of particles per 100 ml of fluid having bigger size than 4, 6 and 14 µm(c) respectively.

ISO Code	Number of particles per 100 ml more than	up to
22	2.000.000	4.000.000
21	1.000.000	2.000.000
20	500.000	1.000.000
19	250.000	500.000
18	130.000	250.000
17	64.000	130.000
16	32.000	64.000
15	16.000	32.000
14	8.000	16.000
13	4.000	8.000
12	2.000	4.000
11	1.000	2.000
10	500	1.000
9	250	500
8	130	250

ISO Code 21/18/15	**21®**	**≥ 4 µm(c)**
ISO Code 21/18/15	**18®**	**≥ 6 µm(c)**
ISO Code 21/18/15	**15®**	**≥ 14 µm(c)**

The above Contamination Class describes a fluid containing:
- between 1.000.000 and 2.000.000 particles ≥ 4 µm(c) per 100 ml
- between 130.000 and 250.000 particles ≥ 6 µm(c) per 100 ml
- between 16.000 and 32.000 particles ≥ 14 µm(c) per 100 ml



FILTERS AND FILTER MEDIA

All the hydraulic systems have an initial solid contamination, tending to increase during operation due to component wear, ingression from seals, etc. For this reason it is necessary to use filters that retain the contaminant and allow the fluid to reach and maintain the required contamination class.
Depending on their location into the system, the most common filter types are:

- RETURN FILTERS, downstream from all the components, filtering the oil before it returns into the tank. Their function is keeping the required contamination level inside the tank (indirect protection of the components) and must be sized to have a high dirt holding capacity (i.e. a long life). They usually have filter elements by glassfiber (absolute filtration, ßx ≥ 75) or by cellulose (nominal filtration, ßx ≥ 2)
- IN LINE FILTERS, on the pressure line, protecting directly one or more components, ensuring they are fed with oil having the proper contamination class. They usually have filter elements by glassfiber (absolute filtration, ßx ≥ 75) sometime by cellulose (nominal filtration, ßx ≥ 2)
- SUCTION FILTERS, on the suction line, protecting the pump from possible coarse contamination. They usually have filter elements by metal wire mesh (geometric filtration) and must be sized properly, to avoid any possible pump cavitation.

Good AIR FILTERS (breathers), filtering the air drawn into the tank when the oil goes to the actuators, must be used to avoid contaminant ingression from the environment. When a very low contamination class is required (i.e. very good cleanliness) it can be necessary to use a OFF-LINE FILTER, that operates at steady flow rate and pressure, thus getting the highest filtration efficiency. Even the new oil has always a certain solid contamination, so it is a good rule to make any filling or refilling of the system by using a FILTRATION UNIT.

HOW TO MEASURE THE FILTRATION EFFICIENCY

BETA RATIO

$ß_x = (n_{in} = X\ µm) : (n_{out} = X\ µm)$

where "n" is the number of particles = x µm
upstream and downstream from the filter.

E.g. if you have 100.000 particles = 10µm upstream and 1.000 particles downstream:
$ß_{10}$ = 100.000 : 1.000 = 100

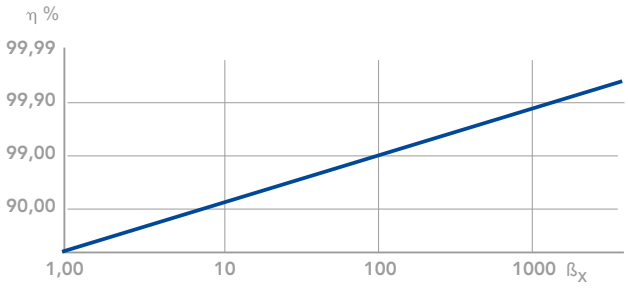

FILTRATION EFFICIENCY η(%):

η = 100 - (100 : ß)

i.e.
$ß_x$ = 2 means = 50,00 %
$ß_x$ = 20 means = 95,00 %
$ß_x$ = 75 means = 98,67 %
$ß_x$ = 100 means = 99,00 %
$ß_x$ = 200 means = 99,50 %
$ß_x$ = 1.000 means = 99,90 %



FILTRATION IN BRIEF



REFERENCES FOR THE "BETA" RATIO

The standard ISO 16889 has replaced since 1999 the former ISO 4572 concerning the Multi-Pass test, stating the Beta value of a filter element.
The current standard considers the test dust ISO MTD instead of the ACFTD formerly used, both in the Multi-Pass test rigs and for the calibration of the automatic particle counters.

In the ISO 16889 the particles sizes are measured in a different way than in the ISO 4572.
To avoid any confusion, when micron are measured according to the current spec they are indicated as **µm$_{(c)}$**.

Depending on the measuring method, the reference Beta values of the UFI filter media are as follows:

UFI MEDIA	SOFIMA MEDIA	$ß_{x(c)} > 1000$ (ISO 16889)	$ß_x > 200$ (ISO 4572)
FA	FT	5 µm$_{(c)}$	3 µm
FB	FC	7 µm$_{(c)}$	6 µm
FC	FD	12 µm$_{(c)}$	12 µm
FD	FV	21 µm$_{(c)}$	25 µm

N.B.
The contamination classes achieved (i.e. the performances on the field) as well as the pressure drop values **are unchanged.**

FILTER MEDIA AND CONTAMINATION CLASSES

Each hydraulic components manufacturer specifies the contamination class required for the best performance and life of their components.

To achieve the required contamination class, the proper UFI filter media must be chosen according to this table:

Typical application	Aeronautic, test rigs.	Aeronautic, ind. Robotics	Ind. robotics, precision machine tools	High reliability ind. machines, Hydrostatic transmissions	Industrial machines, earth moving machines	Mobile machines	Machines for heavy industry	Machines for agriculture systems not continuos service
Pumps and/or motors	-	Piston, variable > 21 Mpa	Piston, variable < 21 MPa Vane, variable > 14 Mpa	Pist./vane, variable < 14 MPa Pist./vane, fIxed > 14 Mpa	Pistons, fixed < 14 Mpa Vane, fixed > 14 Mpa	Vane, fixed gear > 14 Mpa	Vane, fixed gear < 14 Mpa	Vane, fixed gear < 14 Mpa
Valves	Servovalves > 21 Mpa	Servovalves < 21 MPa Proportional > 21 Mpa	Proportional < 21 MPa Cartridge > 14 Mpa	Cartridge < 14 Mpa	Solenoid > 21 Mpa	Solenoid < 21 Mpa	Solenoid > 14 Mpa	Solenoid > 14 Mpa
Contamination class ISO 4406	15/13/10	16/14/11	17/15/12	18/16/13	19/17/14	20/18/15	21/19/16	22/20/17
Recommended UFI filter media	**FA** $ß_{5(c)} > 1.000$	**FA - FB** $ß_{5(c)} > 1.000$ $ß_{7(c)} > 1.000$	**FB** $ß_{7(c)} > 1.000$	**FB - FC** $ß_{7(c)} > 1.000$ $ß_{12(c)} > 1.000$	**FC - FD** $ß_{12(c)} > 1.000$ $ß_{21(c)} > 1.000$	**FD** $ß_{21(c)} > 1.000$	**FD - CC** $ß_{21(c)} > 1.000$ $ß_{10} > 2$	**CC** $ß_{10} > 2$

N.B. NAS 1638 is officially inactive for new designs after May 30, 2001.



REAL FLOW RATE THROUGH THE FILTER

In order to size properly the filter, it is essential to calculate the REAL flow rate of the oil passing through it:

- IN SUCTION AND PRESSURE FILTERS the flow rate is usually the same as the pump delivery (with the exception of the FPD01 and 12 series, where the flow rate is just the one required by the pilot valve)
- in RETURN FILTERS it is necessary to calculate the maximum possible flow rate, taking in account any possible additional return line, cylinder and accumulator. If such data are unknown, as a good rule a flow rate at least 2 ÷ 2,5 times the pump delivery should be considered.

Filter element life is significantly effected by the pollution level at the machine location and by the maintenance level of the machine. Considering these parameters the actual flow rate should be multiplied by the following "Environmental Factor":

ENVIRONMENTAL FACTOR

System maintenance level	Environment contamination level		
	LOW	MEDIUM	HIGH
• tank with good protection, efficient air breathers • few actuators, with very good protection from contaminant ingression • frequent monitoring of filter conditions	1	1	1,3
• tank with protection, good air breathers • many actuators, with good protection from contaminant ingression • scheduled monitoring of filter conditions	1	1,5	1,7
• tank with poor protection • many actuators, with low protection from contaminant ingressions • random monitoring of filter conditions	1,3	2	2,3
	F. i. system located in climatized room	F. i. system located in industrial building	F. i. system located in hostile environment (foudry, wood workingmachines, mobile machines)

PRESSURE DROP (Δp)

After having stated the filter media and the REAL flow rate, the filter must be chosen from the "flow rate tables" in the catalogue.
The values shown there take in account the pressure drop Δp met by the fluid passing through the filter, that must be within a certain value.
In practice, the "assembly Δp" (Δp filter housing + Δp filter element) with clean filter element should be:

- **3 kPa** (0,03 bar) max for suction filters
- **35 ÷ 50 kPa** (0,35 ÷ 0,5 bar) max for return filters
- **35 ÷ 50 kPa** (0,35 ÷ 0,5 bar) max for pressure filters < 11 MPa (110 bar)
- **80 ÷120 kPa** (0,80 ÷1,2 bar) max for pressure filters > 11 MPa (110 bar)

Lower initial pressure drop provides better filter efficiency and longer filter element service life.

N.B. The flow rate values given in the tables are referred to mineral oil with kinematic viscosity "V" of 30 cSt and density "ps" = 0,86 Kg/dm^3.
When using oils with different features, the following correction factors must be applied at the Δp_0 values obtained on the curves:
FILTER HOUSING
the pressure drop is directly proportional to the oil density "ps", so in case you have $ps_1 \neq 0,86$ ► $\Delta p_1 = (\Delta p_0 \times ps_1) : 0,86$
FILTER ELEMENT
the pressure drop through the filter element varies in function of the kinematic oil viscosity, so in case you have a kinematic viscosity V_1 (cSt) different from cSt:

- for kinematic oil viscosity ≤ 150 cSt ► $\Delta p_1 = \Delta p_0 \times (V_1 : 30)$
- for kinematic oil viscosity > 150 cSt ► $\Delta p_1 = \Delta p_0 \times [V_1 : 30 + \sqrt{(V_1 : 30)}] : 2$

(for more details about kinematic oil viscosity see the diagram on the next page)
Some fluids have **filterability problems** (difficulty in passing through a "multilayer" (glassfiber) filter media).
In such cases a **correction factor** must be considered when sizing the filter: this factor must be verified with the filter manufacturing, specifying all the features of the fluid.
It is a good rule, when sizing the filter, to consider also the max recommended fluid speed:
in suction lines 0,1< v < 1 m/s | in return lines 1,5< v < 4 m/s | in pressure lines 5< v < 10 m/s

FILTRATION IN BRIEF

CLOGGING INDICATOR

During the system operation, the pressure drop through the filter increases as the element clogs, due to the contaminant retained.
The filter element must be replaced when clogged and anyway before the pressure drop reaches the bypass valve set value.
For this reason it **is recommended a clogging indicator on the filter. It gives a visual or electrical indication and must have a set value lower than the bypass valve set value**, to get an exact indication of the right time for filter element replacement.
On return and low pressure filters the clogging indicator can be a **pressure gauge** or a **pressure switch**, measuring the pressure upstream the filter. On some return filters and on **high pressure filters**, the clogging indicator can be of **differential** type: measuring the pressure upstream and downstream the filter and activating a signal when the differential pressure reaches the set value.
On **suction filters** the clogging indicator is a **vacuum gauge** or a **vacuum switch**, measuring the depressure downstream the filter.
All the **UFI** filters have the port for the indicator as a standard feature; if the filter is ordered without indicator the port is plugged with a removeable plug allowing the indicator to be added easily at any time.

VISCOSITY VS TEMPERATURE

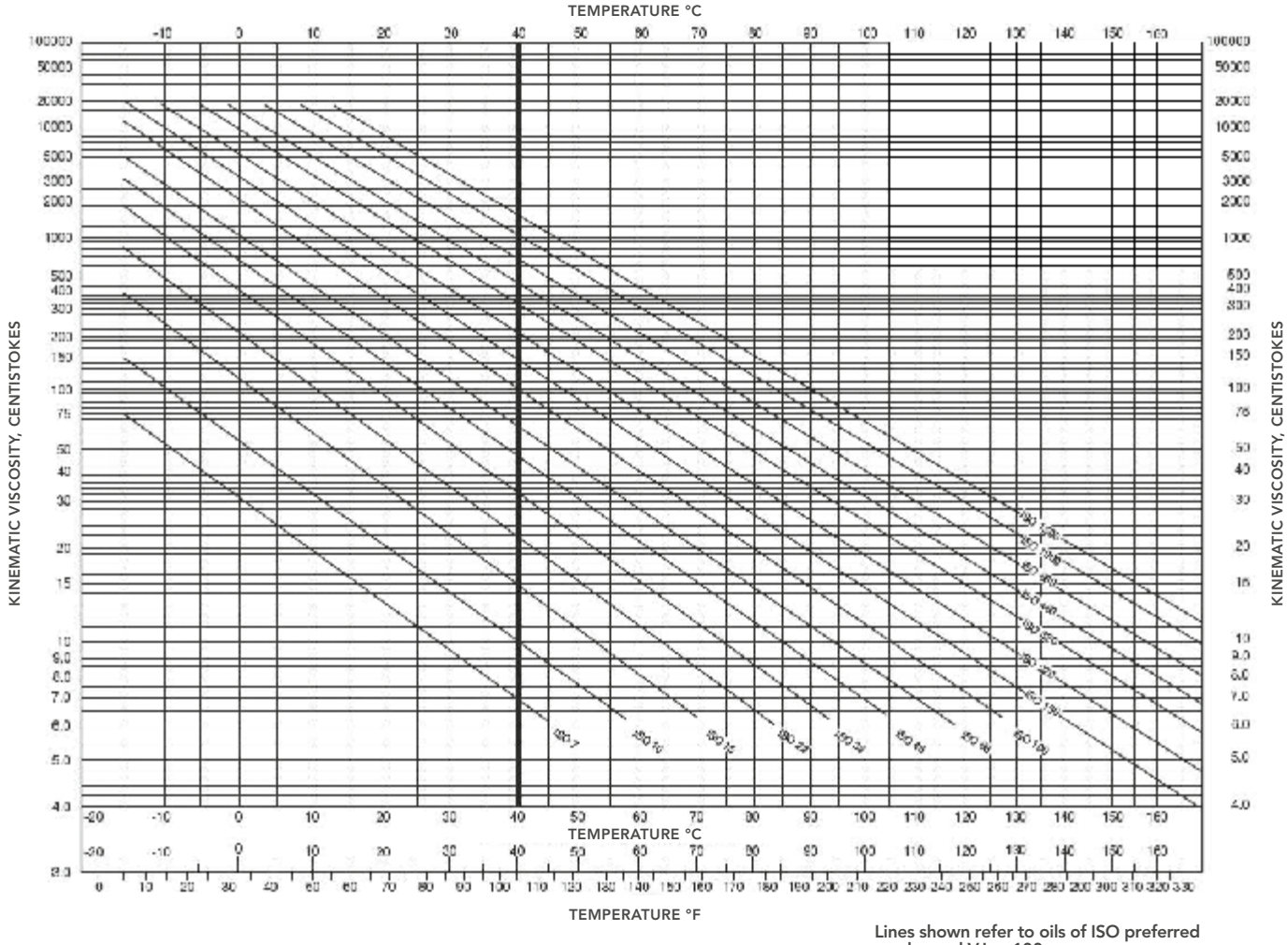

Lines shown refer to oils of ISO preferred grades and V.I. = 100.
Lower V.I. oils will show steeper slopes.
Higher V.I. oils will show flatter slopes.



ISO FLUIDS CLASSIFICATION AND COMPATIBILITY WITH MATERIALS

The table here gives some general indication of fluid classification (ref. ISO 6743) and their compatibility; we recommend to verify the exact features of the fluid with the supplier.

ISO ref.	Type of fluid	Features	Compatibility (10th digit in ordering code)
HH	Mineral base fluid	No additives	N
HL	Mineral base fluid	Anticorrosion, antioxidation add.	N
HM	Mineral base fluid	Antiwear additives	N
HV	Mineral base fluid	Viscosity improver additives	N
HFA	Fire extinguishing fluid	Oil in water emulsion (water >90%)	G (aluminium and zinc not compatible)
HFB	Fire extinguishing fluid	Water in oil emulsion (water >40%)	G (aluminium and zinc not compatible)
HFC	Fire extinguishing fluid	Water glycol	G (aluminium and zinc not compatible)
HFD	Fire extinguishing fluid	Synthetic fluid (phosforic ester)	F (NBR not compatible)
HTG	Environmentally accepted fluid	Vegetal base fluid	N
HPG	Environmentally accepted fluid	Glycol base synthetic fluid	G (aluminium and zinc not compatible)
HE	Environmentally accepted fluid	Esther base synthetic fluid	F (NBR not compatible)

The filter element can be considered as the processor within the filtration computer, that's why extensive knowledge and a many years of manufacturing expertise make significant difference in the design and development of filter element performances and reliability.
Hydraulic filter elements normally use one of three different types of media :

- Metal wire mesh: it is a surface filter and it gives a geometrical filtration. It's rating is determined as "Largest diameter of hard spherical particle that will pass through the media";
- Cellulose (paper impregnated with resin): it is a depth filter media with a irregular structure. It's classified on average pore dimension.
- Microfiber (inorganic fiber impregnated with resin): it is a depth filter media with regular structure. It's classified on average pore dimension and it consists of multiple layers
- Thanks to the multilayer structure with differential porosity the microfiber media retains even smaller particle sizes than the reference filtration ratio of each filter media.

FILTRATION IN BRIEF

The actual retention capacity behaviour is described in the graph here below:

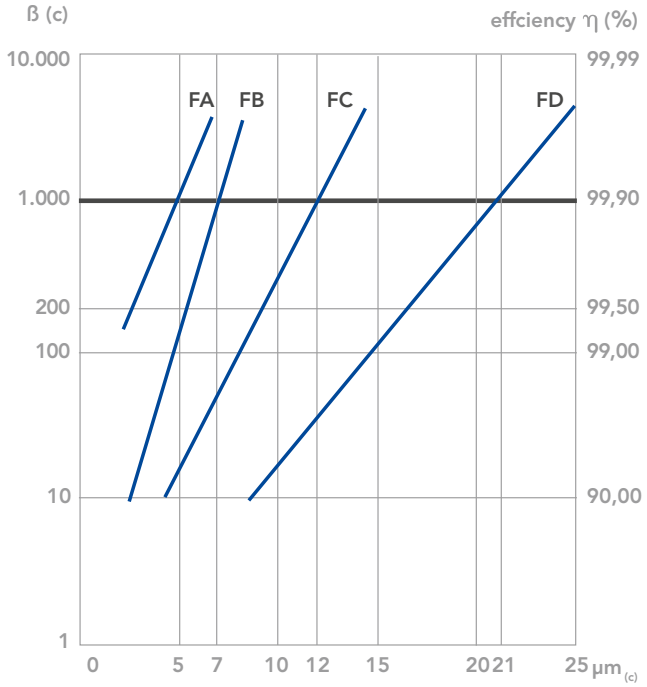

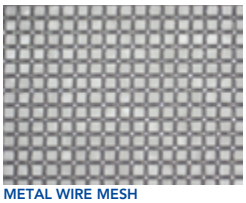
METAL WIRE MESH


CELLULOSE

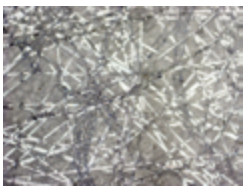
MICROFIBER

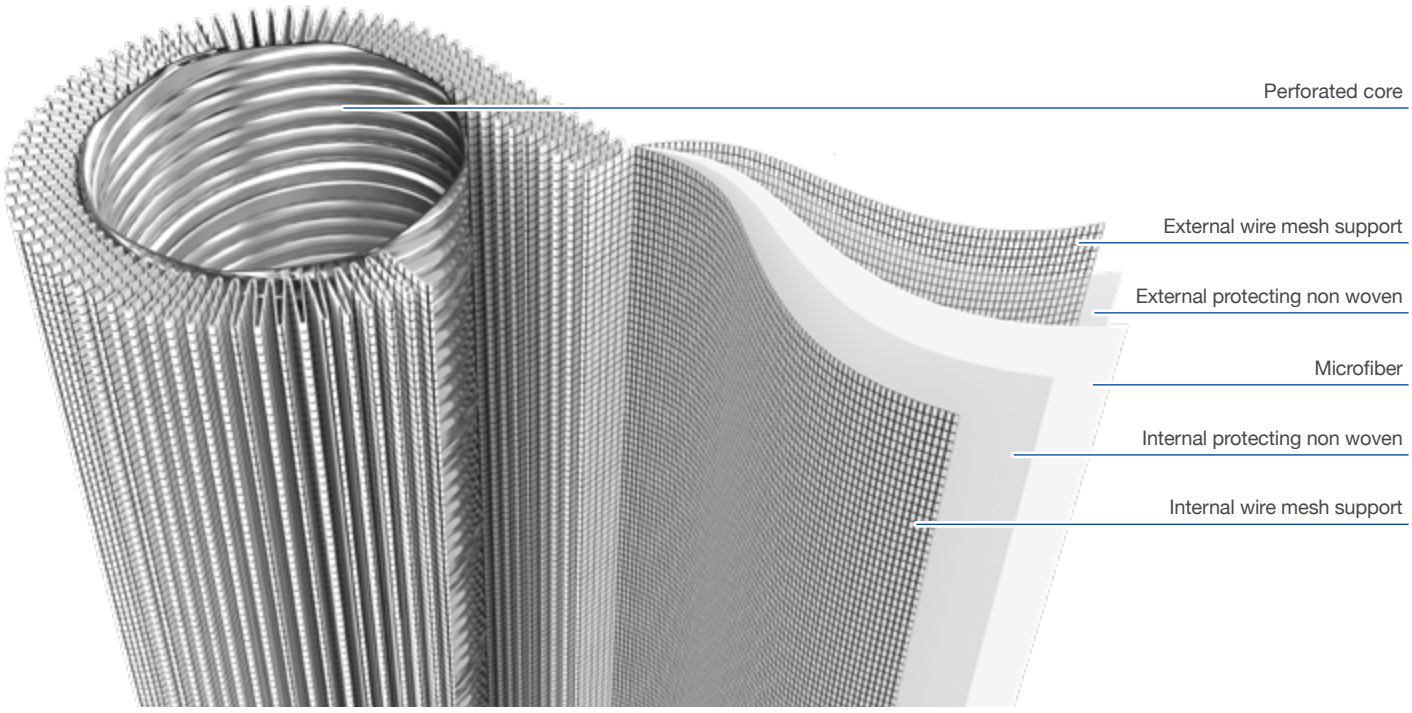



UNIT CONVERSION TABLE

TO CONVERT ►	INTO	MULTIPLY BY
INTO ◄	TO CONVERT	DIVIDE BY
l	gal_{US}	0,2642
l	gal_{UK}	0,22
l/min	m^3/h	0,06
kg	lb	2,205
bar	psi	14,5
kPa	psi	0,145
bar	kPa	100
°C	°F	°C x 1,8 +32



NOTES



NOTES





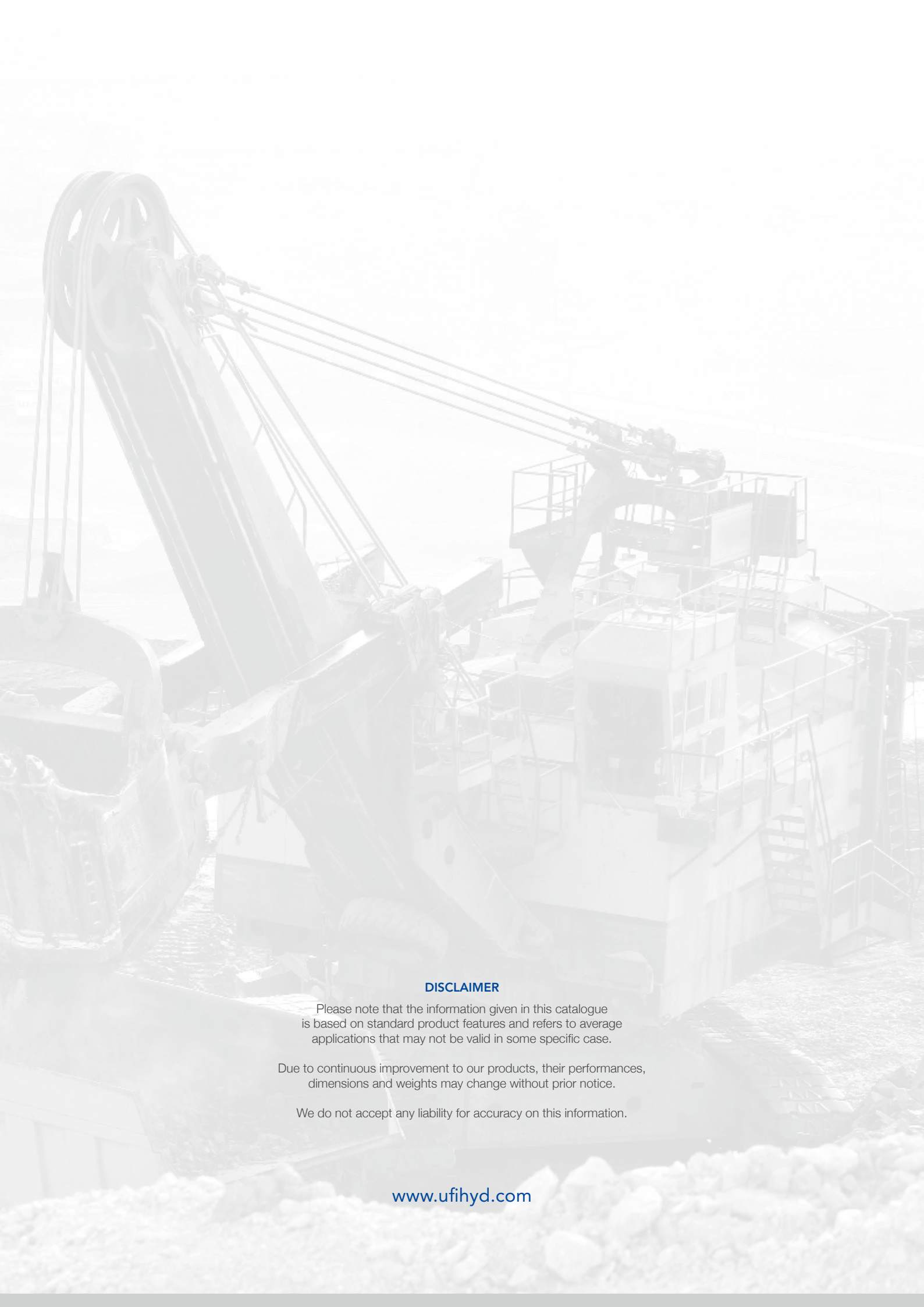

DISCLAIMER

Please note that the information given in this catalogue is based on standard product features and refers to average applications that may not be valid in some specific case.

Due to continuous improvement to our products, their performances, dimensions and weights may change without prior notice.

We do not accept any liability for accuracy on this information.

www.ufihyd.com

Company with quality management system certified by DNV
ISO 9001 - IATF 16949

Company with environmental system certified by DNV
ISO 14001

UFI HYDRAULIC DIVISION
PLANET FILTER S.P.A.
Via S. Chierico, 24 - Bolgare (BG) - Italy
T +39 0354493831 - F +39 035843743
info.ufihyd@it.ufifilters.com

Cod. 999.0837.1

UFI FILTERS INDIA PVT LTD.
Plot no .D-222/ 47 ,T.T.C M.I.D.C Shirwane | Nerul Navi - Mumbai - 400706 - India
T +91 2227635755 - F +91 2227635755

UFI FILTERS USA INC.
50 W. Big Beaver Road, Suite 440 | Troy, MI 48084 - USA
T +1 2485350266

UFI FILTERS KOREA LIMITED
42, Hwanggeum 3-ro, Yangchon-eup | Gimpo-si, Gyeonggi-do, 10048 - Korea
T +82 319861341 - F +82 319861349

SOFIMA AUTOMOTIVE FILTER (SHANGHAI) CO. LTD.
38 Xuxiang Road, Qingpu District | Shanghai, China
T +21 39792688